SEPARATUM

ACTA MATHEMATICA

ACADEMIAE SCIENTIARUM HUNGARICAE

TOMUS XII FASCICULI 1—2

G. GRÄTZER and E. T. SCHMIDT

STANDARD IDEALS IN LATTICES

1961

STANDARD IDEALS IN LATTICES

By

G. GRÄTZER and E. T. SCHMIDT (Budapest)

(*Presented by* A. RÉNYI)

To Professor LADISLAUS FUCHS *without whose constant help and encouragement we could never have achieved our humble results*

Contents

Introduction 18

Chapter I. *Preliminaries*

§ 1. Some notions and notations 22

§ 2. Congruence relations in lattices 23

§ 3. Lattices and elementes with special properties 26

Chapter II. *Standard elements and ideals*

§ 1. Standard elements 27

§ 2. Standard ideals 30

§ 3. Basic properties of standard elements and ideals 33

§ 4. Additional properties of standard elements and ideals 37

Chapter III. *Standard and neutral elements*

§ 1. Relations between standard and neutral elements 40

§ 2. Standard elements in weakly modular lattices 42

§ 3. A neutrality condition for standard elements 46

§ 4. On the lattice of all ideals of a weakly modular lattice 49

Chapter IV. *Homomorphisms and standard ideals*

§ 1. Homomorphism kernels and standard ideals 56

§ 2. Isomorphism theorems 60

§ 3. The Zassenhaus lemma 64

§ 4. The Schreier extension problem for lattices 67

Chapter V. *Characterizations of neutral elements in modular lattices*

§ 1. Characterizations by distributive equalities 69

§ 2. Neutral elements as elements with unique relative complements . . . 72

Chapter VI. *Ideals satisfying the first isomorphism theorem*

§ 1. The case of relatively complemented lattices with zero satisfying the ascending chain condition 75

§ 2. A general theorem 76

§ 3. Modular lattices of locally finite length with zero 78

§ 4. A characterization of standard ideals by the first isomorphism theorem 84

Bibliography 85

Introduction

The subject of this paper is to define a special class of lattice ideals, the class of standard ideals, and to examine its properties in detail. Before giving the definition of standard ideal we want the reader make acquainted with three tendencies of modern lattice theory which lead naturally to this notion.

The distributive lattices play a central role in lattice theory. This may be explained, on one hand, by the fact that lattices were abstracted from Boolean algebras through the distributive lattices. On the other hand, the distributive lattices have a lot of important properties that lattices in general do not have and, consequently, many of the researches were restricted to distributive lattices.

This fact gives the reason why some mathematicians have tried to define types of elements resp. ideals of lattices which preserve some properties of distributive lattices. It was of importance when in his paper [23] O. ORE has defined the notion of neutral element and ideal in modular lattices, and it was also of significance that in [4] G. BIRKHOFF succeeded in defining these notions in arbitrary lattices. The neutral elements play a central role, for instance, in the theory of direct factorizations of lattices (see [6]). Therefore the question how it is possible to generalize this notion to a wider class of lattice elements and ideals seems to be of interest.

Another trend of researches wants to elaborate the theory of lattice ideals similarly to the theory of ideals in rings or invariant subgroups in groups. Chiefly we are thinking of the fact that any ideal of a ring is the kernel of one and only one homomorphism, furthermore the ideals satisfy the well-known isomorphism theorems, the lemma of Zassenhaus and the Jordan—Hölder—Schreier refinement theorem. Such efforts have to overbridge many difficulties. Naturally, within the Boolean algebras — since the Boolean algebras are rings as well — the researcher does not meet any difficulty. It is also easy to settle this question in distributive lattices, only a good definition of the factor lattice is needed. (The simplest possible method is the following: we embed the distributive lattice in a Boolean algebra — for instance by the method of [13] — and so we get from the well-known notions and theorems of Boolean algebras the same in distributive lattices.)

The case of general lattices is not so simple. In general, the above mentioned theorems are not true. In his paper [31] K. SHODA avoided these difficulties by a suitable definition of the factor algebra; this definition of factor algebra, however, in case of lattices does not seem to be applicable. This was pointed out in [14] by J. HASHIMOTO, remarking that this definition of factor algebra in chains gives only the factor chain of two elements.

In [14], using an other definition of factor lattices, J. HASHIMOTO has proved interesting isomorphism theorems. HASHIMOTO made the very strong restriction: all the ideals occurring in the isomorphism theorems, are neutral. The question arises: is it possible to enlarge the class of neutral ideals, preserving the validity of the isomorphism theorems?

The third tendency of researches that we are going to sketch has started from the Birkhoff—Menger structure theorem of complemented modular lattices of finite length (see G. BIRKHOFF [2], [3] and K. MENGER [22]). This structure theorem asserts that the lattices of the above type coincide with the direct products of simple lattices. A theorem of R. P. DILWORTH [8] states that this structure theorem remains true without any alteration if we omit the supposition of modularity (of course, we must change the word "complemented" to "relatively complemented"). In fact, with this theorem began the investigation of the structure of relatively complemented lattices. The aim of these researches is to prove the results of the theory of relatively complemented modular lattices for relatively complemented lattices as well (some example from among these kinds of papers: J. E. MCLAUGHLIN [20], [21] and G. SZÁSZ [32]).

The following theorem of G. BIRKHOFF [6] is well known: in a complemented modular lattice if we let a congruence relation Θ correspond to the ideal of all x with $x \equiv 0$ (Θ), then we get a natural one-to-one correspondence between neutral ideals and congruence relations. A theorem of SHIH-CHIANG WANG [34], connected with this theorem of G. BIRKHOFF, asserts that the lattice of all congruence relations of a complemented modular lattice is a Boolean algebra if and only if all neutral ideals are principal. However, if we want to formulate these theorems for relatively complemented lattices or for section complemented lattices (i. e. in which the intervals $[0, a]$, as lattices, are complemented), then we do not get in general true assertions. So the question arises, how it is possible to get natural generalizations of these theorems for relatively complemented lattices, i. e. one may ask for the class of ideals, that plays, from the point of view of homomorphisms, a similar role in relatively complemented (section complemented) lattices, as the neutral ideal in complemented modular lattices.

We see that the developments of these there tendencies of lattice theory raise a common request, namely, that of finding appropriate generalizations of neutral ideals, of course, one generalization to each tendency! It was a great surprise to us, when it became clear that the *very same generalization* of neutral ideals answers all the questions raised above. This generalization is given by the notion of standard element and ideal.

An element s of the lattice L will be called *standard* if

$$x \cap (s \cup y) = (x \cap s) \cup (x \cap y)$$

for all pairs of elements x, y of L. A standard ideal of L is defined as a standard element of the lattice of all ideals of L.

The aim of the present paper is to study the most important properties of the standard elements and ideals and, as an application, to prove that the standard ideals make us possible to develop further the above listed three tendencies of lattice theory. We will prove that in some respects the notion of standard ideals is the best-possible one. Namely, the class of standard ideals is the widest one, satisfying the first isomorphism theorem, provided some natural conditions are assumed. Many other properties are also typical to the standard ideals, e. g. the existence of a "dictionary" — as given below. But, of course, if somebody will try to develop a theory of certain type of ideals, satisfying the requirements only of one of the above mentioned tendencies, then he will go further at the direction than we did.

It will appear from this paper that the notion of standard ideal corresponds to the notion of invariant subgroup of groups. Several theorems of group theory may be "translated" to lattice theory using the following "dictionary":[1]

$$\begin{aligned} \text{subgroup} &\rightarrow \text{ideal} \\ \text{invariant subgroup} &\rightarrow \text{standard ideal} \\ \text{factor group} &\rightarrow \text{factor lattice}^{2} \\ \text{group operation} &\rightarrow \text{join operation.}^{3} \end{aligned}$$

We will use this "dictionary" for getting the appropriate forms of the isomorphism theorems, the Zassenhaus lemma, the solution of Schreier's extension problem and so on. We will see that the "dictionary" works well in all these cases. We get, of course, only the translations of the theorems but not those of the proofs!

The dictionary may be used also for translating negative assertions. An example: the invariant subgroup of an invariant subgroup is in general

[1] The "dictionary" may be used only in translating from group theory to lattice theory but not in the reversed direction! Therefore we used the sign $\rightarrow$ instead of equality.

[2] modulo a standard ideal!

[3] In the colloquium on Partially Ordered Sets (Oberwolfach, 26—30 October 1959) we have delivered a lecture in which a sketch of this theory was given. After the lecture Professor R. H. Bruck proposed an extension of the dictionary, that — after a short discussion — led to the correspondence

abelian group $\rightarrow$ distributive lattice.

Using this, one can define the solvability of a lattice, notions corresponding to the centralizator, and commutator subgroup and so on. It may be hoped that one can elaborate this part of the theory.

not invariant in the whole group and the same is true for standard ideals. (It is worth while mentioning that the neutral ideal of a neutral ideal is neutral in the whole lattice.)

Despite the fact that the notion of standard ideal is more general than that of neutral ideal, there appeared a lot of new properties of neutral ideals from the study of this generalization. Besides many not all too important properties, the best example is the result of Chapter VI (Theorem 23). This theorem characterizes neutral ideals in a special class of modular lattices. However, the proof shows clearly that the assertion is a typical one for standard ideals. Hence, we may say, that in this theorem we use the standard ideals as a method of proof.

The paper consists of six chapters.

The first chapter is of preliminary character. It contains notions which are not generally known, while for the fundamental notions of lattice theory and general algebra we refer to [6], [16] and [29]. The frequently used notions and theorems from the literature are enumerated.

In Chapter II, after the definition of standard element and ideal, we prove the two fundamental characterization theorems. In the remaining part we deduce some properties of the standard element and ideal which seems to be of importance.

In Chapter III we are interested in the connections between standard and neutral elements. In § 1 we verify the simplest connections, but already from these we deduce a new proof of a theorem concerning neutral ideals; a proof of this theorem within the theory of neutral ideals does not seem to be an easy task. In § 2 we prove the coincidence of standard and neutral elements in a rather wide class of lattices including modular as well as relatively complemented lattices. In § 3 we give a necessary and sufficient condition for a standard element to be neutral. In § 4 we deal with the lattice of all ideals of a weakly modular lattice. We prove that the lattice of all ideals is not necessarily weakly modular. In the remaining part of the section we discuss some properties of the ideal lattice.

In Chapter IV we prove that the class of standard ideals and that of the homomorphism kernels coincide in section complemented lattices. From this we infer the generalizations of the above mentioned theorems of G. BIRKHOFF and S. WANG. Then we prove the isomorphism theorems, the lemma of Zassenhaus and some of its consequences. In the last section we solve the lattice-theoretical equivalent of Schreier's extension problem.

In Chapter V we first prove that any distributive equality is capable of the characterization of the neutrality of an element of a modular lattice. Then in § 2 we prove that in modular lattices the uniquely relatively complemented

elements are just the neutral ones, and thus we get a generalization of a well-known theorem of VON NEUMANN.

In Chapter VI we deal with ideals satisfying the first isomorphism theorem. In § 1 for a special class of section complemented lattices, while in § 3 for modular lattices with zero and of locally finite length we prove that this class of ideals coincides with the class of neutral ideals. In § 4 we show that under some natural conditions the standard ideals form the widest class of ideals satisfying the first isomorphism theorem.

There are 20 unsolved problems given at the end of the corresponding sections. We hope some of the readers will find it interesting to deal with them.

CHAPTER I
PRELIMINARIES

§ 1. Some notions and notations

The partial ordering relation will be denoted by $<$, in case of set lattices (that is lattices the elements of which are certain subsets of a given set) by $\subset$. In lattices the meet and the join will be designated by $\cap$ and $\cup$, and the complete meet and complete join by $\bigwedge$ and $\bigvee$. The least and greatest element of a partially ordered set (or of a lattice) we denote by 0 and 1. If a covers b (i. e. $a > b$, but $a > x > b$ for no x), then we write $a \succ b$.

If $\alpha(x)$ is a property defined on the set H, then we define $\{x; \alpha(x)\}$ as the set of all $x \in H$ for which $\alpha(x)$ is true. Hence in partially ordered sets $(a] = \{x; x \leqq a\}$ is the principal ideal generated by a, while $\{x; a \leqq x \leqq b\}$ is the interval $[a, b]$, provided that $a \leqq b$. If b covers a, then the interval $[a, b]$ is a prime interval. The dual principal ideal is denoted by $[a)$.

If any two elements a, b of L, satisfying $a < b$, may be connected by a finite maximal chain, then L is said to be semi-discrete. If the lengths of the maximal chains of the lattice L are finite and bounded, then L is called of finite length. If all intervals of the lattice L, as lattices, are of finite length, then L is of locally finite length. If L has a 0 and is of locally finite length, furthermore for all $a \in L$, in $[0, a]$ any two maximal chains are of the same length, then we say that in L the Jordan—Dedekind chain condition is satisfied. In this case the length of any maximal chain of the interval $[0, a]$ will be denoted by $d(a)$, and $d(x)$ is called the dimension function.

Let P and Q be partially ordered sets. The ordinal sum of P and Q is defined as the partially ordered set, which is the set union of P and Q,

and the partial ordering remains unaltered in P and Q, while $x < y$ holds for all $x \in P$ and $y \in Q$; this partially ordered set will be denoted by $P \oplus Q$.

The set of all ideals of a lattice L, partially ordered under set inclusion, form a lattice, which will be denoted by $I(L)$.

LEMMA I. *$I(L)$ is a conditionally complete lattice. The meet of a set of ideals (if it exists) is the set-theoretical meet. The join of the ideals I_α $(\alpha \in A)$ is the set of all x such that*

$$x \leqq i_{\alpha_1} \cup \cdots \cup i_{\alpha_n} \quad (i_{\alpha_j} \in I_{\alpha_j})$$

for some elements α_j of A.

If A is a general algebra and Θ is a congruence relation of A, then the congruence classes of A modulo Θ form a general algebra $A(\Theta)$. This is a homomorphic image of A.

We will use the two general isomorphism theorems (RÉDEI [29]):

THE FIRST GENERAL ISOMORPHISM THEOREM. *Let A be a general algebra and A' a subalgebra of A, further let Θ be an equivalence relation of A such that every equivalence class of A may be represented by an element of A'. Let Θ' denote the equivalence relation of A' induced by Θ. If Θ is a congruence relation, then so is Θ' and*

$$A(\Theta) \cong A'(\Theta').$$

The natural isomorphism makes a congruence class of A correspond to the contained congruence class of A'.

THE SECOND GENERAL ISOMORPHISM THEOREM. *Let A' be a homomorphic image of the general algebra A, let Θ be an equivalence relation of A, and denote Θ' the equivalence relation of A' under which the equivalence classes are the homomorphic images of those of A modulo Θ, and suppose that no two different equivalence classes of A modulo Θ have the same homomorphic image. Then Θ is a congruence relation if and only if Θ' is one and in this case*

$$A(\Theta) \cong A'(\Theta').$$

The natural isomorphism makes an equivalence class of A correspond to its homomorphic image.

§ 2. Congruence relations in lattices

Let Θ be a congruence relation of the lattice L, and denote by $L(\Theta)$ the homomorphic image of L induced by the congruence relation Θ, that is, the lattice of all congruence classes. If $L(\Theta)$ has a zero, then the complete

inverse image of the zero is an ideal of L, called the kernel of the homomorphism $L \to L(\Theta)$.

A simple criterion for a binary relation η to be a congruence relation is formulated in

LEMMA II. (GRÄTZER and SCHMIDT [12].) *Let η be a binary relation defined on the lattice L. η is a congruence relation if and only if the following conditions hold for all $x, y, z \in L$:*

(a) $x \equiv x \ (\eta)$;

(b) $x \cup y \equiv x \cap y \ (\eta)$ *if and only if* $x \equiv y \ (\eta)$;

(c) $x \geqq y \geqq z$, $x \equiv y \ (\eta)$, $y \equiv z \ (\eta)$ *imply* $x \equiv z \ (\eta)$;

(d) $x \geqq y$ *and* $x \equiv y \ (\eta)$, *then* $x \cup z \equiv y \cup z \ (\eta)$ *and* $x \cap z \equiv y \cap z \ (\eta)$.

The congruence relations of L will be denoted by $\Theta, \Phi, \ldots$. The set of all congruence relations of L, partially ordered by "$\Theta \leqq \Phi$ if and only if $x \equiv y \ (\Theta)$ implies $x \equiv y \ (\Phi)$", will be designated by $\Theta(L)$.

LEMMA III. (BIRKHOFF [4] and KRISHNAN [18].)[4] *$\Theta(L)$ is a complete lattice. $x \equiv y \ (\bigwedge_{\alpha \in A} \Theta_\alpha)$ if and only if $x \equiv y \ (\Theta_\alpha)$ for all $\alpha \in A$; $x \equiv y \ (\bigvee_{\alpha \in A} \Theta_\alpha)$ if and only if there exists in L a sequence of elements $x \cup y = z_0 \geqq z_1 \geqq \cdots \geqq z_n = x \cap y$ such that $z_i \equiv z_{i-1} \ (\Theta_{\alpha_i})$ $(i = 1, 2, \ldots, n)$ for suitable $\alpha_1, \ldots, \alpha_n \in A$.*

The least and greatest elements of the lattice $\Theta(L)$ will be designated by ω and ι, respectively.

Let H be a subset of L, $\Theta[H]$ will denote the least congruence relation under which any pair of elements of H is congruent. This we call the congruence relation induced by H. If H has just two elements, $H = \{a, b\}$, then $\Theta[H]$ will be written as Θ_{ab}. The congruence relation Θ_{ab} is called minimal.

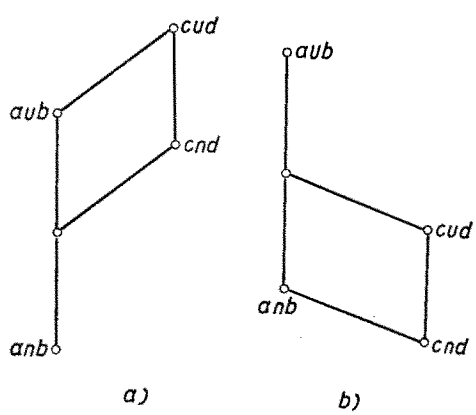

Fig. 1

First we describe — following R. P. DILWORTH — the minimal congruence relation Θ_{ab}. To this end we have to make some preparations.

Given two pairs of elements a, b and c, d of L, suppose that either

$$c \cap d \geqq a \cap b$$

and

$$(c \cap d) \cup (a \cup b) = c \cup d,$$

[4] See also GRÄTZER and SCHMIDT [12].

or

$$c \cup d \leqq a \cup b \quad \text{and} \quad (c \cup d) \cap (a \cap b) = c \cap d.$$

Then we say that a, b is weakly projective in one step to c, d, and write $\overline{a, b} \xrightarrow{1} \overline{c, d}$. The situation is given in Fig. 1. In other words, $\overline{a, b} \xrightarrow{1} c, d$ if and only if the intervals $[(a \cup b) \cap c \cap d, a \cup b]$, $[c \cap d, c \cup d]$ or $[a \cap b, (a \cap b) \cup c \cup d]$, $[c \cap d, c \cup d]$ are transposes in the sense of [6].

If there exist two finite sequences of elements $a = x_0, x_1, \ldots, x_n = c$ and $b = y_0, \ldots, y_n = d$ in L such that

$$\overline{a, b} = \overline{x_0, y_0} \xrightarrow{1} \overline{x_1, y_1} \xrightarrow{1} \cdots \xrightarrow{1} \overline{x_n, y_n} = \overline{c, d}, \tag{1}$$

then we say that a, b is weakly projective to c, d, in notation: $\overline{a, b} \longrightarrow \overline{c, d}$, or if we are also interested in the number n, then we write $\overline{a, b} \xrightarrow{n} \overline{c, d}$.

If $\overline{a, b} \xrightarrow{1} \overline{c, d}$ and $\overline{c, d} \xrightarrow{1} \overline{a, b}$, then a, b and c, d are transposes, and we write $\overline{a, b} \xleftrightarrow{1} \overline{c, d}$. If the sequence (1) may be chosen in such a way that the neighbouring members are transposes, then a, b and c, d are called projective, and we write $\overline{a, b} \longleftrightarrow \overline{c, d}$.

The notion of weak projectivity is due to R. P. DILWORTH [8] (see also MALCEV [19], GRÄTZER and SCHMIDT [12]). DILWORTH uses his terminology just reversed as we do.

The importance of this notion is shown by the fact that $\overline{a, b} \rightarrow \overline{c, d}$ and $a \equiv b\ (\Theta)$ imply $c \equiv d\ (\Theta)$ (applying this to $\Theta = \omega$, we get that $a = b$ implies $c = d$, a fact which will be used several times).

Now we are able to describe Θ_{ab}:

THEOREM I. (R. P. DILWORTH [8].) *Let a, b, c, d be elements of the lattice L. $c \equiv d\ (\Theta_{ab})$ holds if and only if there exist $y_i \in L$ with*

$$c \cup d = y_0 \geqq y_1 \geqq \cdots \geqq y_k = c \cap d \quad \textit{and} \quad \overline{a, b} \rightarrow \overline{y_{i-1}, y_i} \quad (i = 1, 2, \ldots, k). \tag{2}$$

It is easy to describe $\Theta[H]$, using Lemma III, Theorem I and the following trivial identity:

$$\Theta[H] = \bigvee_{a, b \in H} \Theta_{ab}. \tag{3}$$

The symbol $\Theta[H]$ will be used mostly in case H is an ideal. Then one can prove the following important identity (see [14]):

$$\Theta[\vee I_\alpha] = \vee \Theta[I_\alpha] \qquad (I_\alpha \in I(L)). \tag{4}$$

The following definition is of central importance in this paper. Let L be a lattice and I an ideal of L. By the factor lattice L/I of the lattice L modulo the ideal I is meant the homomorphic image of L induced by $\Theta[I]$, i. e.

$$L/I \cong L(\Theta[I]).$$

Finally, we mention the definition of permutability: the congruence relations Θ and Φ are called permutable if $a \equiv x$ (Θ) and $x \equiv b$ (Φ) imply the existence of a y such that $a \equiv y$ (Φ) and $y \equiv b$ (Θ).

§ 3. Lattices and elements with special properties

2 will denote the lattice of two elements.

Let U denote the non-modular lattice of five elements, generated by the elements p, q, r, that is, $p > q$, $p \cup r = q \cup r = i$, $p \cap r = o$. V will denote the modular, non-distributive lattice of five elements with the generators p, q, r, that is, $p \cup q = q \cup r = r \cup p = i$, $p \cap q = q \cap r = r \cap p = o$.

An element d of the lattice L is called distributive if

$$d \cup (x \cap y) = (d \cup x) \cap (d \cup y) \tag{5}$$

for all $x, y \in L$. In [25] O. ORE has proved that d is distributive if and only if $x \equiv y$ $(\Theta[(d]])$ implies $x \cup y = [(x \cap y) \cup d] \cap (x \cup y)$.

An element n of L is said to be neutral if the sublattice $\{n, x, y\}$ is distributive, where x and y are arbitrary elements from L. The following theorem will be useful:

THEOREM II. (ORE [24].) *The elements $x, y, z \in L$ generate a distributive sublattice of L if and only if for all permutations a, b, c of x, y, z the following equalities hold:*

$$a \cup (b \cap c) = (a \cup b) \cap (a \cup c), \tag{6}$$

$$a \cap (b \cup c) = (a \cap b) \cup (a \cap c), \tag{7}$$

$$(a \cap b) \cup (b \cap c) \cup (c \cap a) = (a \cup b) \cap (b \cup c) \cap (c \cup a). \tag{8}$$

COROLLARY. *An element n of L is neutral if and only if for all $x, y \in L$ the five equalities obtained from* (6)—(8) *by substituting permutations of x, y, n hold.*

REMARK. It will follow from the theory of standard elements that this corollary may be sharpened, omitting three from the five conditions.

THEOREM III. (BIRKHOFF [5].) *An element n of L is neutral if and only if*

(i) $\quad n \cup (x \cap y) = (n \cup x) \cap (n \cup y)$ *for all* $x, y \in L$;

(i′) $\quad n \cap (x \cup y) = (n \cap x) \cup (n \cap y)$ *for all* $x, y \in L$;

(ii) $\quad n \cap x = n \cap y$ *and* $n \cup x = n \cup y$ $(x, y \in L)$

imply $x = y$, i.e. the relative complements of n are unique.

THEOREM IV. (ORE [24].) *An element n of a modular lattice L is neutral if and only if condition* (i) *(or equivalently, condition* (i′)*) is satisfied.*

An ideal I of L is called distributive if it is a distributive element of $I(L)$. I is neutral if it is a neutral element of $I(L)$.

The lattice L is weakly modular (see GRÄTZER and SCHMIDT [12]) if from $\overline{a, b} \to \overline{c, d}$ $(a, b, c, d \in L; c \neq d)$ it follows the existence of $a_1, b_1 \in L$ satisfying $a \cap b \leqq a_1 < b_1 \leqq a \cup b$ and $\overline{c, d} \to \overline{a_1, b_1}$.

LEMMA IV. (GRÄTZER and SCHMIDT [12].) *Let the lattice L be*

A) *modular, or*

B) *relatively complemented, or*

C) *simple.*

Then L is weakly modular.

A lattice L with zero is called section complemented if all of its intervals of type $[0, a]$ are complemented as lattices. In general, the lattice L is section complemented if any element of L is contained in a suitable principal dual ideal which is section complemented as a lattice.[5]

The following assertion is trivial:

LEMMA V. *Any relatively complemented lattice is section complemented.*

Finally, we mention the $\bigvee$-distributive law:

$$x \cap \bigvee y_\alpha = \bigvee (x \cap y_\alpha).$$

A complete lattice L is called $\bigvee$-distributive if this law unrestrictedly holds in L.

Of importance is the theorem of FUNAYAMA and NAKAYAMA that asserts: $\Theta(L)$ is $\bigvee$-distributive.

The partition lattice $P(H)$ of the set H is defined as the partially ordered set of all partitions of H, where the partition p is said to be smaller than q if p is a refinement of q.

CHAPTER II

STANDARD ELEMENTS AND IDEALS

§ 1. Standard elements

We begin with repeating the definition of standard elements:

The element s of the lattice L is standard if the equality

$$x \cap (s \cup y) = (x \cap s) \cup (x \cap y) \tag{9}$$

holds for all $x, y \in L$.

[5] The section complemented lattices with zero are called by HERMES [16] „abschnittkomplementäre Verbände". The English name was suggested by Mr. LORENZ.

First of all, let us see some examples for standard elements. In the lattice U (see Chapter I, § 3) p is a standard element. At the same time, it is clear that p is not neutral. (Furthermore, in the same lattice $(r]$ is a homomorphism kernel, but r is not standard.)

Obviously, any element of a distributive lattice is standard. Furthermore, in any lattice the elements 0 and 1 (if exist) are standard elements.

The simplest form for defining standard elements is the equality (9), however, it is not the most important property of a standard element. Some important characterizations of standard elements are given in

THEOREM 1. (The fundamental characterization theorem of standard elements.) *The following conditions upon an element s of the lattice L are equivalent:*

(α) *s is a standard element;*

(β) *the equality $u=(u\cap s)\cup(u\cap t)$ holds whenever $u\leqq s\cup t$ $(u,t\in L)$;*

(γ) *the relation Θ_s, defined by "$x\equiv y$ (Θ_s) if and only if $(x\cap y)\cup s_1=x\cup y$ for some $s_1\leqq s$", is a congruence relation;*

(δ) *for all $x,y\in L$*

(i) $$s\cup(x\cap y)=(s\cup x)\cap(s\cup y),$$

(ii) $$s\cap x=s\cap y \quad \textit{and} \quad s\cup x=s\cup y \quad \textit{imply} \quad x=y.$$

PROOF. We will prove the equivalence of the four conditions cyclically

(α) *implies* (β). Indeed, if (α) holds and $u\leqq s\cup t$, then $u=u\cap(s\cup t)$. Owing to (9) we get $u=(u\cap s)\cup(u\cap t)$, which was to be proved.

(β) *implies* (γ). Using condition (β) and Lemma II we will prove that Θ_s as defined above is a congruence relation.

(a) $x\equiv x$ (Θ_s). Indeed, for any $x\in L$, the equality $(x\cap x)\cup(x\cap s)=x$ trivially holds, so if we put $s_1=x\cap s$, we get the assertion.

(b) $x\cap y\equiv x\cup y$ (Θ_s) if and only if $x\equiv y$ (Θ_s). This is trivial from the definition of Θ_s.

(c) $x\geqq y\geqq z$, $x\equiv y$ (Θ_s) and $y\equiv z$ (Θ_s) imply $x\equiv z$ (Θ_s). By hypothesis $x=y\cup s_1$ and $y=z\cup s_2$ for suitable elements $s_1,s_2\leqq s$. Consequently, $x=y\cup s_1=(z\cup s_2)\cup s_1=z\cup(s_1\cup s_2)$ for $s_1\cup s_2\leqq s$, that means, $x\equiv z$ (Θ_s).

(d) In case $x\geqq y$ and $x\equiv y$ (Θ_s) hold, $x\cup z\equiv y\cup z$ (Θ_s) and $x\cap z\equiv y\cap z$ (Θ_s). In fact, by assumption $x=y\cup s_1$ $(s_1\leqq s)$, and hence we get $x\cup z=(y\cup z)\cup s_1$, that is $x\cup z\equiv y\cup z$ (Θ_s). To prove the second assertion, we start from the relations $x=y\cup s_1$ and $x\cap z\leqq y\cup s_1\leqq y\cup s$. Applying condition ($\beta$) to $u=x\cap z$, $t=y$ and using $x\cap y=y$, we get

$$x\cap z=(x\cap z\cap s)\cup(x\cap z\cap y)=(y\cap z)\cup s_2,$$

where $s_2=x\cap z\cap s\leqq s$, which means $x\cap z\equiv y\cap z$ (Θ_s).

(γ) *implies* (δ). First we prove that (γ) implies (i). According to the definition of Θ_s, the congruences $x \equiv s \cup x$ (Θ_s) and $y \equiv s \cup y$ (Θ_s) hold for arbitrary $x, y \in L$. We get $x \cap y \equiv (s \cup x) \cap (s \cup y)$ (Θ_s). By monotonicity, $x \cap y \leqq (s \cup x) \cap (s \cup y)$, hence again by the definition of Θ_s it follows that $(s \cup x) \cap (s \cup y) = (x \cap y) \cup s_1$ with suitable $s_1 \leqq s$. Joining with s and keeping the inequalities $s_1 \leqq s$ and $s \leqq (s \cup x) \cap (s \cup y)$ in view, we derive $s \cup (x \cap y) = (s \cup x) \cap (s \cup y)$, which is nothing else than (i).

Secondly, we prove that (γ) implies (ii). Let the elements x and y be chosen as in (ii). We know that $s \cup y \equiv y$ (Θ_s), so meeting with x and using $x \cup s = y \cup s$ we get $x = (x \cup s) \cap x = (y \cup s) \cap x \equiv y \cap x$ (Θ_s), consequently, using (γ), $(x \cap y) \cup s_1 = x$ with suitable $s_1 \leqq s$. From the last equality $s_1 \leqq x$, accordingly, $s_1 \leqq s \cap x = s \cap y \leqq y$ (in the meantime we have used the supposition $s \cap x = s \cap y$ of (ii)), thus $x = (x \cap y) \cup s_1 \leqq (x \cap y) \cup y = y$. We may conclude similarly that $y \leqq x$, and thus $x = y$, which was to be proved.

(δ) *implies* (α). Let x and y be arbitrary elements of L and define $a = x \cap (s \cup y)$ and $b = (x \cap s) \cup (x \cap y)$. By (ii), it suffices to prove that $s \cap a = s \cap b$ and $s \cup a = s \cup b$.

To prove the first equality we start from $s \cap a$:

$$s \cap a = s \cap [x \cap (s \cup y)] = x \cap [s \cap (s \cup y)] = x \cap s.$$

It follows from the monotonicity that $x \cap s \leqq b = (x \cap s) \cup (x \cap y) \leqq [x \cap (s \cup y)] \cup [x \cap (s \cup y)] = a$. Meeting with s, we get $s \cap x \leqq s \cap b \leqq s \cap a$. But we have already proved that $s \cap x = s \cap a$, and so $s \cap a = s \cap b$. To prove $s \cup a = s \cup b$ we start from $s \cup a$ and use (i) several times:

$$s \cup a = s \cup [x \cap (s \cup y)] = (s \cup x) \cap [s \cup (s \cup y)] = (s \cup x) \cap (s \cup y) =$$
$$= s \cup (x \cap y) = s \cup (x \cap s) \cup (x \cap y) = s \cup b,$$

and so Theorem 1 is completely proved.

Rewriting (i) and weakening (ii), (δ) may be transformed to the following form:

LEMMA 1. *An element s of L is standard if and only if the following two conditions are satisfied:*

(i*) *the correspondence $x \to x \cup s$ is an endomorphism of L;*

(ii*) *if $x \geqq y$, $s \cup x = s \cup y$ and $s \cap x = s \cap y$, then $x = y$.*

It is easy to see that (i) is equivalent to (i*). Indeed, for any fixed s, the correspondence $x \to x \cup s$ is a join-endomorphism. That it is meet-endomorphism as well, is guaranteed just by (i). In the proof of Theorem I, at the step "(δ) implies (α)" we have used (ii) only for $x = a$ and $y = b$, and

in this case $y \leqq x$ holds. Consequently, in the proof we have only used (ii*), and so one can replace (ii) by (ii*).

From condition (γ) of Theorem I we derive easily:

LEMMA 2. *Let s be a standard element of the lattice L. Then $(s]$ is a homomorphism kernel, namely $\Theta[(s]] = \Theta_s$. Conversely, if $x \equiv y$ $(\Theta[(s]])$ holds when and only when $(x \cap y) \cup s_1 = x \cup y$ with a suitable $s_1 \leqq s$, then s is a standard element.*

PROOF. The congruence relation Θ_s obviously satisfies $\Theta_s = \Theta[(s]]$, consequently $(s]$ is in the kernel of the homomorphism induced by Θ_s. We have to prove that $(s]$ is just the kernel. Otherwise there exists an $x > s$ with $x \equiv s$ (Θ_s). By definition, it follows $x = s \cup s_1$ $(s_1 \leqq s)$ which is obviously a contradiction. Conversely, if $\Theta[(s]] = \Theta_s$, then Θ_s is a congruence relation, since $\Theta[(s]]$ is one, and then from condition (γ) of Theorem 1 it follows that s is a standard element.

We have formulated Lemma 2 separately — despite the fact that it is an almost trivial variant of condition (γ) of Theorem 1 — because it points out that property of the standard elements which we think to be the most important one. It may be reformulated as follows: if $(s]$ is a principal ideal of L, then $x \equiv y$ $(\Theta[(s]])$ if and only if there exist a sequence of elements $x \cup y = z_0 \geqq z_1 \geqq \cdots \geqq z_m = x \cap y$ of L, an $s_1 \leqq s$, and a sequence of integers $n_1, \ldots, n_m$ such that $\overline{s_1, s} \xrightarrow{n_i} \overline{z_{i-1}, z_i}$ $(i = 1, \ldots, m)$. Now the definition of standardness is as follows: s is standard if and only if $n_i = 1$ may be chosen for all i. It follows then we may suppose $m = 1$ as well.

§ 2. Standard ideals

An ideal S of the lattice L is called standard if it is a standard element of the lattice $I(L)$, that is, if

$$I \cap (S \cup K) = (I \cap S) \cup (I \cap K) \tag{10}$$

holds for any pair of ideals I, K of L.

An example for standard ideals is given by the ideal $(p]$ of the lattice U. Further examples will be given at the end of this section.

Our chief aim in this section is to prove the analogue of Theorem 1 for standard ideals.

THEOREM 2. (The fundamental characterization theorem of standard ideals.) *The following seven conditions for an ideal S of the lattice L are equivalent:*

(α') *S is a standard ideal;*

(α'') *the equality*

$$I \cap (S \cup K) = (I \cap S) \cup (I \cap K)$$

holds if I and K are principal ideals;

(β') *for any ideal I, the elements of $S \cup I$ are of the form $s \cup x$ ($s \in S$, $x \in I$);*

(β'') *for any principal ideal I, the elements of $S \cup I$ are of the form $s \cup x$ ($s \in S$, $x \in I$);*

(γ') *the relation Θ_S of $I(L)$ defined by "$I \equiv K$ (Θ_S) if and only if $(I \cap K) \cup S_1 = I \cup K$ with a suitable $S_1 \subseteq S$" is a congruence relation of $I(L)$;*

(γ'') *the relation $\Theta[S]$ of L defined by "$x \equiv y$ ($\Theta[S]$) if and only if $(x \cap y) \cup s = x \cup y$ with a suitable $s \in S$" is a congruence relation;*

(δ') *for all I and $K \in I(L)$*

(i) $$S \cup (I \cap K) = (S \cup I) \cap (S \cup K),$$

(ii) $$S \cap I = S \cap K \quad \textit{and} \quad S \cup I = S \cup K \quad \textit{imply} \quad I = K.$$

PROOF. The conditions of this theorem are the analogues of those of Theorem 1. To make the similarity clear, first we show that (β') is equivalent to the following condition:

(β^*) if for the ideals I and J the inequality $J \subseteq S \cup I$ holds, then $J = (J \cap S) \cup (J \cap I)$.

It is, obviously, equivalent to (β^*) that any element of J may be written in the form $s \cup x$ ($s \in S, x \in I$). Since J is arbitrary, that means: any element of $S \cup I$ is of the form $s \cup x$, and this is condition (β'). So these two conditions are equivalent.

Another analogue of (β'') may also be formulated:

(β^{**}) if for the principal ideals I and J the inequality $J \subseteq S \cup I$ holds, then $J = (J \cap S) \cup (J \cap I)$.

Now, it is trivial that the equivalence of (α'), (β'), (γ') and (δ') is an immediate consequence of Theorem 1.

(α'') is a special case of (α'). The proofs that (α'') implies (β'') and (β'') implies (γ'') run on the similar lines as those of the corresponding implications in the proof of Theorem 1. Thus it is enough to prove that (γ'') implies (β'). Suppose (γ'') holds and let I be an arbitrary ideal of L, and $x \in S \cup I$. From Lemma I we get the existence of $s \in S$ and $i \in I$ with $x \leqq s \cup i$. Since $s \equiv s \cap i$ ($\Theta[S]$), therefore $s \cup i \equiv (s \cap i) \cup i = i$ ($\Theta[S]$), and so $x = x \cap (s \cup i) \equiv x \cap i$ ($\Theta[S]$). Accordingly, using (γ'') we get $x = (x \cap i) \cup s'$ where $s' \in S$. But $x \cap i \in I$, hence (β') is proved.

The proof of Theorem 2 is complete.

The analogues of Lemmas 1 and 2 are naturally true. We formulate only the analogue of the most important part of Lemma 2.

LEMMA 3. *Let S be a standard ideal of L. Then the congruence relation $\Theta[S]$ of L defined by condition (γ'') of Theorem 2 is the congruence relation induced by S and S is the kernel of the homomorphism induced by $\Theta[S]$.*

We may say that Lemma 3 gives an approval of the notation we have used in condition (γ'') of Theorem 2.

We get many examples of standard ideals from the following

LEMMA 4. *The principal ideal $(s]$ of L is standard if and only if s is a standard element of L.*

PROOF. The assertion is clear comparing Lemma 2 with condition (γ'') of Theorem 2, since $s_1 \in (s]$ and $s_1 \leqq s$ are equivalent statements.

It follows now from Lemma 4 that the existence of standard elements in a lattice implies the existence of standard ideals. The converse of this statement is not true. We construct a lattice L in which there exists a standard ideal, but has no standard element. Consider the direct product of the chain of the integers with **2**. The elements of this lattice are of the form $(n, 0)$ and $(n, 1)$ where n is an arbitrary integer and 0 and 1 are the elements of **2**. We define new elements x_n $(n = 0, \pm 1, \ldots)$, subject to the following relations:

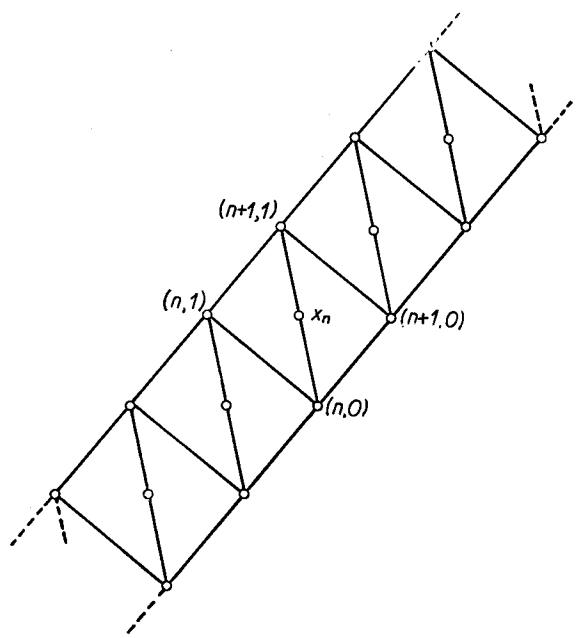

Fig. 2

$$x_n \cup (n, 1) = x_n \cup (n+1, 0) = (n+1, 1),$$
$$x_n \cap (n, 1) = x_n \cap (n+1, 0) = (n, 0).$$

The resulting partially ordered set L is shown in Fig. 2. One can easily

prove that L is a lattice and L is simple, that is, $\Theta(L)$ consists of two elements. In L there is no standard element (if s were one, then $\omega < \Theta_s < \iota$ would be a contradiction), but the whole lattice is a standard ideal.

A proper standard ideal is obtained if we take two copies of this lattice, L_1 and L_2, and define $L \cong L_1 \oplus L_2$. Then this lattice contains no standard element, but L_1 and L_2 are standard ideals.

It is natural to ask, why the following condition is not included in Theorem 2:

(δ'') if I and K are principal ideals, then

(i) $$S \cup (I \cap K) = (S \cup I) \cap (S \cup K);$$

(ii) $$S \cap I = S \cap K \quad \text{and} \quad S \cup I = S \cup K \text{ imply } I = K.$$

The reason is that we could not prove the equivalence of this condition to the others. Therefore we ask

PROBLEM 1. Does condition (δ'') characterize the standardness of the ideal S?

§ 3. Basic properties of standard elements and ideals

In this section and in the next one we shall deduce from the fundamental characterization theorems some important properties of standard elements and ideals.

If S is a standard ideal, then we call the congruence relation $\Theta[S]$ generated by S a standard congruence relation. If $S = (s]$, then $\Theta[S] = \Theta_s$, so Θ_s is a standard congruence relation that we may call principal standard congruence relation. First we see some results on the connection between standard ideals and standard congruence relations.

THEOREM 3. *The standard elements form a distributive sublattice of the lattice L. The principal standard congruence relations form a sublattice of $\Theta(L)$. Between these two lattices the correspondence $s \to \Theta_s$ is an isomorphism.*

Further, the standard ideals form a $\vee$-distributive sublattice of $I(L)$ which is closed under forming complete join. The standard congruence relations form a sublattice of $\Theta(L)$. The correspondence $S \to \Theta[S]$ is an isomorphism between these two lattices.

PROOF. First we verify the assertions concerning standard elements. Let s_1 and s_2 be standard. Then by an iterated use of (9) we get that for all $x, y \in L$

$$x \cap [(s_1 \cup s_2) \cup y] = x \cap [s_1 \cup (s_2 \cup y)] = (x \cap s_1) \cup [x \cap (s_2 \cup y)] =$$
$$= (x \cap s_1) \cup (x \cap s_2) \cup (x \cap y) = [x \cap (s_1 \cup s_2)] \cup (x \cap y),$$

that means, by definition, that $s_1 \cup s_2$ is standard. It is almost trivial that the correspondence $s \to \Theta_s$ is a join-endomorphism. Indeed, owing to Lemma 2 and the standardness of $s_1 \cup s_2$, the equality $\Theta_{s_1} \cup \Theta_{s_2} = \Theta_{s_1 \cup s_2}$ is equivalent to $\Theta[(s_1]] \cup \Theta[(s_2]] = \Theta[(s_1 \cup s_2]]$, and this is a special case of formula (4). Further, if $s_1 \neq s_2$, then $\Theta_{s_1} \neq \Theta_{s_2}$, for the kernels of the homomorphisms induced by Θ_{s_1}, resp. Θ_{s_2} are different (see Lemma 2).

Now we prove $\Theta_{s_1} \cap \Theta_{s_2} = \Theta_{s_1 \cap s_2}$. If $x \equiv y$ $(\Theta_{s_1} \cap \Theta_{s_2})$, then $x \equiv y$ (Θ_{s_1}), and so $(x \cap y) \cup s_1' = x \cup y$ $(s_1' \leqq s_1)$, on the other hand $x \equiv y$ (Θ_{s_2}) holds as well, and from this $s_1' = (x \cup y) \cap s_1' \equiv (x \cap y) \cap s_1'$ (Θ_{s_2}), hence with a suitable $s \leqq s_2$ the relation $s_1' = [(x \cap y) \cap s_1'] \cup s$ holds. Consequently, $s \leqq s_1'$ is valid, therefore $s \leqq s_1 \cap s_2$ and $(x \cap y) \cup s = (x \cap y) \cup [(x \cap y) \cap s_1'] \cup s = x \cup y$. We have proved the following: $x \equiv y$ $(\Theta_{s_1} \cap \Theta_{s_2})$ if and only if $(x \cap y) \cup s = x \cup y$ with a suitable $s \in (s_1 \cap s_2]$. According to Lemma 2, this means that $s_1 \cap s_2$ is standard and $\Theta_{s_1} \cap \Theta_{s_2} = \Theta_{s_1 \cap s_2}$. Thus we have shown that the standard elements form a sublattice of L, the principal standard congruence relations form a sublattice of $\Theta(L)$, and the correspondence $s \to \Theta_s$ is an isomorphism. It follows now, since $\Theta(L)$ is a distributive lattice, that the lattice of standard elements is distributive.

Applying the results proved so far to the lattice of all ideals of L, we get that the standard ideals form a sublattice of $I(L)$, the congruence relations Θ_S form a sublattice of $\Theta(I(L))$, and $S \to \Theta_S$ is an isomorphism. But we need the same assertions for $\Theta[S]$ instead of Θ_S. Therefore we prove a lemma from which the desired conclusion will follow.

First we need some notions. Let Θ be a congruence relation of L; Θ defines in the natural way a homomorphism of $I(L)$ under which $I \equiv J$ $(I, J \in I(L))$ if and only if to any $x \in I$ there exists a $y \in J$ such that $x \equiv y$ (Θ), and conversely. That means: $I \equiv J$ if and only if the images of I and J under the homomorphism $L \to L(\Theta)$ are the same. This congruence relation of $I(L)$ we call the extension of Θ to $I(L)$. On the other hand, any congruence relation Φ of $I(L)$ induces a congruence relation of L under which $x \equiv y$ if and only if $(x] \equiv (y]$ (Φ). This we call the restriction of Φ to L. Now we may state

LEMMA 5. *Let S be a standard ideal. Then Θ_S is the extension of $\Theta[S]$ to $I(L)$ and $\Theta[S]$ is the restriction of Θ_S to L.*

PROOF. Let $\overline{\Theta}[S]$ be the extension of $\Theta[S]$ to $I(L)$ and $I \equiv J$ $(\overline{\Theta}[S])$; we suppose $I \subseteq J$. Choosing a $y \in J$ we can find an $x \in I$ $(y \geqq x)$ with $x \equiv y$ $(\Theta[S])$, and so there exists an s_{xy} with $x \cup s_{xy} = y$. The ideal S' generated by the s_{xy} (x and y run over the elements of I and J) satisfies $S' \subseteq S$ and $I \cup S' = J$. On the other hand, if $I \cup S' = J$ with a suitable $S' \subseteq S$,

then with $y \in J$ it follows that $y = s \cup x$ ($s \in S', x \in I, S$ is standard!), and so $x \equiv y$ $(\Theta[S])$. Thus $\overline{\Theta}[S] = \Theta_S$. To show the second assertion, suppose $(a] \equiv (b]$ (Θ_S). Then there exists an $S' \subseteq S$ with $(a \cap b] \cup S' = (a \cup b]$. It follows that $a \cup b \in (a \cap b] \cup S$, and since S is standard, we may find an $s \in S$ with $(a \cap b) \cup s = a \cup b$, which proves $a \equiv b$ $(\Theta[S])$.

COROLLARY. *The correspondence $\Theta[S] \to \Theta_S$ is an isomorphism between the lattice of all standard congruence relations of L and the lattice of all principal standard congruence relations of $I(L)$.*

Combining Corollary of Lemma 5 with the facts we have proved above, we get all the assertions of Theorem 3 with the exception of the statement that the lattice of all standard ideals of L is closed under forming complete join and is $\vee$-distributive.

Suppose the S_α are standard ideals, $S = \bigvee S_\alpha$, I is an arbitrary ideal and $x \in I \cup S$. Owing to Lemma I we may find $s_i \in S_{\alpha_i}$, $y \in I$ such that $x \leqq \bigvee_{i=1}^{n} s_i \cup y$, consequently, $x \in \bigvee_{i=1}^{n} S_{\alpha_i} \cup I$. We know already that $\bigvee_{i=1}^{n} S_{\alpha_i}$ is a standard ideal, hence $x = u \cup v$, $u \in \bigvee_{i=1}^{n} S_{\alpha_i} \subseteq S$ and $v \in I$. Thus, by condition (β') of Theorem 2, S is a standard ideal.

Now we may apply formula (4) which compared with Lemma 3 gives $\Theta[\bigvee S_\alpha] = \bigvee \Theta[S_\alpha]$. Thus the standard congruence relations form a sublattice of $\Theta(L)$ which is closed under forming complete join. In $\Theta(L)$ there holds the $\vee$-distributive law and this is preserved under taking a sublattice which is closed under forming complete join, therefore the lattice of standard congruence relations is $\vee$-distributive, and then the same is true for the lattice of standard ideals. Thus the proof of Theorem 3 is completed.

Naturally arises the question: is the complete meet of standard ideals (if it exists) a standard ideal? We will show by a counterexample that this is not true in general. Let N be the chain of all negative integers, and denote by $0, a, b, 1$ the elements of a Boolean algebra of four elements and

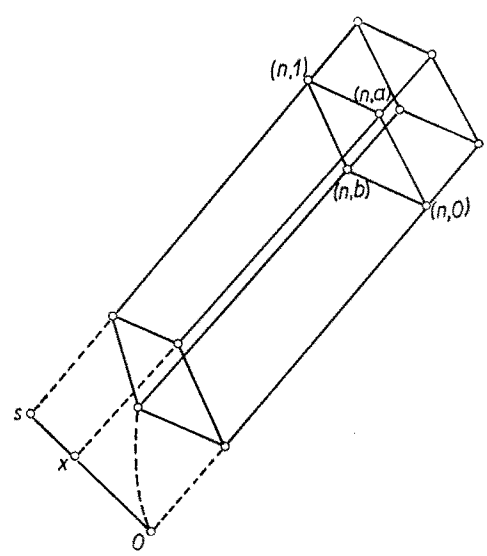

Fig. 3

form the direct product of N and this Boolean algebra. The lattice L is formed by adding three further elements $s, x, 0$ to this direct product subject to

$$\left.\begin{array}{l} x \cap (n, b) = 0, \quad x \cup (n, b) = (n, 1), \quad x \cup (n, a) = (n, a), \\ s \cup (n, a) = s \cup (n, b) = (n, 1), \quad s \cap (n, a) = x, \quad s \cap (n, b) = 0 \end{array}\right\} \qquad (n \in N).$$

The resulting partially ordered set is given by Fig. 3. It is easy to prove that L is a lattice. Define $s_i = (-i, 1)$ $(i = 1, 2, \ldots)$. The principal ideals $(s_i]$ are standard, while their complete meet $(s]$ is not a standard ideal, for

$$(n, b) \cap [s \cup (n, a)] = (n, b),$$
$$[(n, b) \cap s] \cup [(n, b) \cap (n, a)] = 0 \cup (n, 0) = (n, 0),$$

and so (9) does not hold.

Owing to the definition, the following assertion is immediate:

LEMMA 6. *Let the correspondence $x \to \bar{x}$ be the homomorphism of a lattice L onto a lattice $\bar{L}$. If s is a standard element of L, then $\bar{s}$ is a standard element of $\bar{L}$.*

COROLLARY. *Let $x \to \bar{x}$ be a homomorphism of L onto $\bar{L}$, let S be an ideal of L, and denote by $\bar{S}$ the homomorphic image of S under this homomorphism. If S is standard in L, then $\bar{S}$ is standard in $\bar{L}$.*

PROOF OF THE COROLLARY. Let Θ be the congruence relation which induces the homomorphism $x \to \bar{x}$. Then the extension $\bar{\Theta}$ of Θ to $I(L)$ (defined before Lemma 5) is a congruence relation of $I(L)$ and $(x] \equiv (y] (\Theta)$ $(x, y \in L)$ if and only if $x \equiv y$ (Θ). Hence the homomorphism $X \to \bar{X}$ $(X \in I(L))$ induced by $\bar{\Theta}$ is an extension of the homomorphism $x \to \bar{x}$ and carries S onto $\bar{S}$. Thus we may apply Lemma 6 to $I(L)$ and get the Corollary.

The converse of Lemma 6 is not true. One can find easily a lattice L, a homomorphism $x \to \bar{x}$ of L onto $\bar{L}$ and in L a standard element $\bar{s}$ such that in L there is no standard element s with $s \to \bar{s}$. As an example take the lattice U (see § 3 of Chapter I) and the homomorphism induced by Θ_{pq}. In the homomorphic image of U (which is the Boolean algebra of four elements) the image of r is standard, while r is not standard and is not congruent to any standard element (as a matter of fact, r forms alone a congruence class under Θ_{pq}).

From the point of view of later applications it is of importance the

LEMMA 7. *Any two standard congruence relations are permutable.*

PROOF. We have to prove that if S and T are standard ideals, x, y and z elements of the lattice with $x \equiv y$ $(\Theta[S])$, $y \equiv z$ $(\Theta[T])$, then for a suitable element u the relations $x \equiv u$ $(\Theta[T])$, $u \equiv z$ $(\Theta[S])$ hold.

First we consider the case $x \geqq y \geqq z$. Then by condition (γ'') of Theorem 2, we get elements $s \in S$ and $t \in T$ with $x = y \cup s$, $y = z \cup t$. We assert that $u = z \cup s$ fulfils the requirements. Indeed, $z \equiv z \cup s = u$ $(\Theta[S])$ and because of $u \cup t = z \cup s \cup t = y \cup s = x$ we have $u \equiv u \cup t = x$ $(\Theta[T])$.

In the general case consider the elements $x, x \cup y, x \cup y \cup z$. We have $x \equiv x \cup y$ $(\Theta[S])$ and $x \cup y \equiv x \cup y \cup z$ $(\Theta[T])$, therefore with a suitable element v, $x \equiv v$ $(\Theta[T])$ and $v \equiv x \cup y \cup z$ $(\Theta[S])$. We obtain in a similar way the existence of a w with $z \equiv w$ $(\Theta[S])$ and $w \equiv x \cup y \cup z$ $(\Theta[T])$. The element $u = v \cap w$ fulfils the requirements, for $u = v \cap w \equiv v \cap (x \cap y \cap z) = v$ $(\Theta[T])$ and this, together with $v \equiv x$ $(\Theta[T])$, gives $u \equiv x$ $(\Theta[T])$. Similarly, we can prove $u \equiv z$ $(\Theta[S])$, completing the proof of the lemma.

Let s be a standard element of the lattice L. Then from Lemma 2 it is clear that $L/(s] \simeq [s)$. Indeed, for all $x \in L$ we have $x \equiv s \cup x$ (Θ_s), and so any element of L is congruent to a suitable element of $[s)$, therefore $L/(s]$ is a homomorphic image of $[s)$. But this homomorphism is an isomorphism, for $x \geqq y \geqq s$ and $x \equiv y$ (Θ_s) implies $x \leqq y \cup s = y$, i.e. $x = y$.

To determine the factor lattice modulo a non-principal standard ideal is not so simple A solution of this problem is given in

THEOREM 4. *Let S be a standard ideal of the lattice L. Then the lattice of all ideals of L/S is isomorphic to the interval $[S, L]$ of $I(L)$, and, consequently, the interval $[S, L]$ of $I(L)$ determines L/S up to isomorphism.*

PROOF. We know from Lemma 5 that the extension of $\Theta[S]$ to $I(L)$ is Θ_S. Hence the homomorphism $L \to L/S$ induces in $I(L)$ a homomorphism $I(L) \to I(L)/(S]$. But, as we have remarked above, $I(L)/(S] \simeq [S, L]$ where the interval $[S, L]$ is taken in $I(L)$. This, together with a theorem of KOMATU [17], according to which every lattice is determined up to isomorphism by the lattice of its ideals, we get the theorem.

§ 4. Additional properties of standard elements and ideals

In our paper [10] there is a lemma that states: in a distributive lattice if the join and meet of two ideals are principal ideals, then the two ideals themselves are principal. We now generalize this to standard ideals of arbitrary lattices:

LEMMA 8. *Let I be an arbitrary and S a standard ideal of the lattice L. If $I \cup S$ and $I \cap S$ are principal, then I itself is principal.*

PROOF. Let $I \cup S = (a]$ and $I \cap S = (b]$. By condition (β') of Theorem 2 we have $a = s \cup x$ $(s \in S, x \in I)$. We state that $I = (x \cup b]$. Indeed, suppose

$w \geqq x \cup b$ and $w \in I$. Then $(a] \supseteq S \cup (w] \supseteq S \cup (x \cup b] \supseteq S \cup (x] = (a]$, that is, $S \cup (a] = S \cup (x \cup b]$. Further, $(b] = S \cap I \supseteq S \cap (w] \supseteq S \cap (x \cup b] \supseteq S \cap (b] = (b]$, and so $S \cap (w] = S \cap (x \cup b]$. This two equalities imply (see condition (ii) of (δ') of Theorem 2) that $(w] = (x \cup b]$, and so $w = x \cup b$. Therefore, there are no elements in I greater than $x \cup b$, that is, $I = (x \cup b]$, completing the proof of the lemma.

By means of a simple example one can show that under the hypothesis of Lemma 8 S is not necessarily a principal ideal.

Since the ideals of a distributive lattice are standard, an exact analogue of the lemma of [10] is the

COROLLARY. *If the join and meet of two standard ideals are principal, then both standard ideals are principal.*

This corollary does not call for proof.

LEMMA 9. *Let s be a standard element of the lattice L and a an arbitrary element of L. Then $a \cap s$ is a standard element of the lattice $(a]$.*

PROOF. Any element of the ideal $(a]$ may be written in the form $a \cap x$ $(x \in L)$. Hence it is enough to prove that

$$(x \cap a) \cap [(s \cap a) \cup (y \cap a)] = [(x \cap a) \cap (s \cap a)] \cup [(x \cap a) \cap (y \cap a)].$$

Starting from the left member and applying (9) repeatedly, we get

$$(x \cap a) \cap [(s \cap a) \cup (y \cap a)] = (x \cap a) \cap [(s \cup y) \cap a] = (x \cap a) \cap (s \cup y) =$$
$$= (x \cap a \cap s) \cup (x \cap a \cap y) = [(x \cap a) \cap (s \cap a)] \cup [(x \cap a) \cap (y \cap a)]$$

which was to be proved.

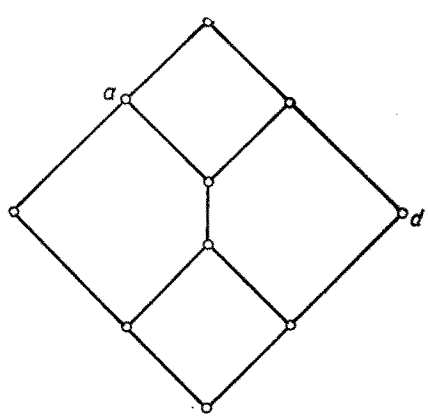

Fig. 4

COROLLARY. *Let S be a standard ideal and I an arbitrary ideal of the lattice L. Then $S \cap I$ is a standard ideal of the lattice I.*

Perhaps it is not worthless to note that the conclusions of this lemma are not valid for distributive elements. A counterexample is the lattice of Fig. 4, where d is a distributive element of the lattice, but the element $a \cap d$ is not a distributive element of the lattice $(a]$.

As we have seen, the neutrality of the element n was defined in such a way that for all $x, y \in L$ the sublattice $\{n, x, y\}$ is distributive. Though, in general, the notion of standard elements does not coincide with the notion of ne-

utral elements, we may hope the validity of a weaker assertion for standard elements. Indeed, the following analogue of the definition of neutral elements is true:

THEOREM 5. *Let s_1 and s_2 be standard elements of the lattice L. Then the sublattice $\{s_1, s_2, x\}$ of L is distributive for all $x \in L$.*

PROOF. Our proof is based upon Theorem II. According to this, we have to prove the validity of (6), (7) and (8).

Condition (7) is valid, for it asserts the same as (9) since b or c is standard. As a consequence of condition (i) of (δ) of Theorem 1, (6) holds if a is standard; otherwise b and c are standard. In this case let us start with the right member of (6), apply (9) for the elements a, $a \cup c$ for the standard element b and then for a, b and the standard element c. We get

$$(a \cup c) \cap (a \cup b) = [(a \cup c) \cap a] \cup [(a \cup c) \cap b] = a \cup (a \cap b) \cup (c \cap b) = a \cup (c \cap b).$$

Finally, we prove (8). (8) is a symmetric function of its variables, therefore we have to prove it for one permutation of its variables only. Using the assertion of Theorem 3, according to which $s_1 \cup s_2$ and $s_1 \cap s_2$ are standard, further equality (9) and condition (i) of (δ) of Theorem 1, we get

$$(s_1 \cap s_2) \cup (s_1 \cap x) \cup (s_2 \cap x) = (s_1 \cap s_2) \cup [(s_1 \cup s_2) \cap x] =$$
$$= [(s_1 \cap s_2) \cup (s_1 \cup s_2)] \cap [(s_1 \cap s_2) \cup x] = (s_1 \cup s_2) \cap [(s_1 \cap s_2) \cup x] =$$
$$= (s_1 \cup s_2) \cap (s_1 \cup x) \cap (s_2 \cup x),$$

and this is just (8). Thus the proof of Theorem 5 is completed.

Applying Theorem 5 to $I(L)$ we get:

COROLLARY. *Let S_1 and S_2 be the standard ideals of the lattice L. Then S_1, S_2 and an arbitrary ideal X of L generate a distributive sublattice of $I(L)$.*

We have got Theorem 5 as an analogue of the definition of neutral elements (ideals). It is natural to ask, whether or not it is possible to get from Theorem 5 a new characterization of standard elements (ideals). That should mean that in a lattice the standard elements form a (unique) maximal subset for which the assertion of Theorem 5 is true. This is not true in general; not even in modular lattices. Consider the lattice V (see § 3 of Chapter I); there are in V only two standard elements: o and i. We may enlarge the set $\{o, i\}$ by the element p, and the assertion of Theorem 5 is true for this enlarged set as well. (See Problem 2.)

Now consider the lattice L and let us fix an element s of L. We call the mapping $x \to (x \cap s, x \cup s)$ of L into $L_s = (s] \times [s)$ the natural mapping of L into L_s. We can obtain by means of this notion a new characterization of

standard elements, which is a direct generalization of a theorem of G. BIRKHOFF [5].

THEOREM 6. *The natural mapping of the lattice L into the lattice L_s is a meet isomorphism if and only if s is a standard element. It is an isomorphism if and only if s is neutral.*

PROOF. The first part of this theorem is essentially condition (δ) of Theorem 1. Namely, condition (i) assures that the mapping is a meet-homomorphism and (ii) that different elements have different images. The second part of the theorem is equivalent to Theorem III.

We remark that the idea of the proof of this theorem is due to BIRKHOFF [5]. This theorem seems to be a good tool for proving the standardness of an element.

COROLLARY. *Let L be a bounded lattice. $L_s \cong L$ in the natural way (the direct components are supposed to be ideals of L and $(x, y) \to x \cup y$) if and only if s is a neutral element having a complement, that is s is an element of the center. In other words, L has a non-trivial direct decomposition if and only if its center has an element different from* 0 *and* 1.

In connection with Theorem 5 the following problem arises:

PROBLEM 2. Is it possible to characterize the set of standard elements as a maximal subset of the lattice L satisfying the condition of Theorem 5 and having some additional properties?

CHAPTER III
STANDARD AND NEUTRAL ELEMENTS

§ 1. Relations between standard and neutral elements

We have mentioned in the Introduction some causes which required the definition of standardness to be a generalization of neutrality and to coincide with the same in modular lattices. It is obvious that our definition fulfils this requirement, that is, the following assertions are valid:

LEMMA 10. *All the neutral elements of the lattice L are standard. Furthermore, in modular lattices the two notions coincide. A standard element s is neutral if and only if condition* (i′) *of Theorem III holds.*

PROOF. The first assertion is clear from the definitions. The second assertion is a consequence of Theorem IV and we get the third statement

by a simple comparison of the conditions of Theorem 1 (δ) with those of Theorem III.

From these simple observations one can get a result of some interest for neutral ideals.

LEMMA 11. *Let n be a neutral element of the lattice L. Then $(n]$ is a neutral ideal of L and conversely.*

PROOF. Every neutral element is standard, and so by Lemma 4, $(n]$ is standard. Then by Lemma 10 it is enough to prove that

$$(n] \cap (I \cup J) = ((n] \cap I) \cup ((n] \cap J) \qquad (I, J \in I(L)).$$

Let $A = (n] \cap (I \cup J)$ and $B = ((n] \cap I) \cup ((n] \cap J)$. Since $A \supseteq B$ holds always, it is enough to prove that $a \in A$ implies $a \in B$. For some $i \in I$ and $j \in J$ we have $a \leqq i \cup j$, and so $a \leqq a \cap (i \cup j) \leqq n \cap (i \cup j)$. But $n \cap (i \cup j) = (n \cap i) \cup (n \cap j)$, because n is neutral and $(n \cap i) \cup (n \cap j)$ is an element of B, hence $a \in B$ holds as well. This completes the proof of the first part of the lemma. The converse statement is trivial.

It is of some interest that we could not find in the literature the assertion of this lemma (in [6] it is stated only for modular lattices). In § 3 of this chapter we shall derive this lemma from a more general theorem, using the deep theorem of ORE (or Lemma 12). We should like to point out that a direct proof of this lemma through Theorem III meets the same difficulty as that mentioned in this paper as Problem 1.

From Lemma 10 it is clear

LEMMA 12. *If an element s is standard in the lattice L as well as in its dual, then s is neutral.*

COROLLARY. *n is neutral if and only if*

$$x \cap (n \cup y) = (x \cap n) \cup (x \cap y),$$
$$x \cup (n \cap y) = (x \cup n) \cap (x \cup y)$$

for all $x, y \in L$.

Thus we see that from the five equalities which we have got from Theorem II to be characteristic for the neutrality of an element, three may be omitted.

LEMMA 13. *Let s and n be elements of L such that n is neutral, $s \leqq n$ and s is standard in $(n]$. Then s is a standard element of L.*

PROOF. From Theorem 6 we know that $x \to (x \cap n, x \cup n)$ is an isomorphism between L and a sublattice of $L_n = (n] \times [n)$. Under this isomorphism $s \to (s, n)$. Since s is standard in $(n]$ and n in $(n]$, therefore s is standard in

L_n. Since the property of being standard is preserved under taking a sublattice and under isomorphism, we get that s is standard in L.

If s is neutral in n, then — it is clear from the above proof — s is neutral in L too, i.e.

COROLLARY 1. *Let s be a neutral element of $(n]$ and n neutral in the lattice L. Then s is a neutral element of L.**

Applying Lemma 13 to $I(L)$ we get

COROLLARY 2. *Let S and N be ideals of the lattice L, $S \subseteq N$ such that N is neutral in L and S is standard in N. Then S is a standard ideal of L.*

Applying Corollary 1 to $I(L)$ we get a theorem of HASHIMOTO [14]:

COROLLARY 3. *A neutral ideal of a neutral ideal is neutral in the whole lattice.*

It is easy to see that the same assertion is not true for standard ideals or elements. As a counterexample take the lattice U and the elements $p > q$. p is standard in U, q is standard in $(p]$, but $(q]$ is not even a homomorphism kernel!

PROBLEM 3. We have seen in the Corollary of Lemma 12 that it is possible to define the neutral elements with the aid of two equalities. Is it possible to define neutrality by a single equality? (E.g.: is the neutrality of n equivalent to the condition that $(x \cap y) \cup (y \cap n) \cup (n \cap x) = (x \cup y) \cap (y \cup n) \cap \cap (n \cup x)$ holds for all $x, y \in L$?)

PROBLEM 4. Let G be a finite group and $L(G)$ the lattice of all subgroups of G. Characterize the standard elements of $L(G)$ (the same problem for neutral elements of $L(G)$ has been solved by G. ZAPPA [35]).

§ 2. Standard elements in weakly modular lattices

Our aim in this section is to prove the coincidence of (distributive and) standard and neutral elements in weakly modular lattices. This theorem contains a part of Lemma 10, that has asserted the same in modular lattices. There the proof was trivial, in consequence of the application of Theorem IV. But in weakly modular lattices we are in lack of a theorem of this kind, therefore the proof is not so simple.

* *Added in proof* (13 February 1961). The following assertion may be proved: Let a and b be neutral elements of the lattice L, $a \leqq b$ and c a standard (neutral) element of $, b$. Then c is a standard (neutral) element of L.

THEOREM 7. *In a weakly modular lattice L, an element d is distributive if and only if it is neutral.*

PROOF. It follows easily from a theorem of ORE's paper [25] that d is distributive if and only if $x \equiv y$ $(\Theta[(d]])$ is equivalent to $[(x \cap y) \cup d] \cap \cap (x \cup y) = x \cup y$. It follows that the kernel of the homomorphism induced by the congruence relation $\Theta[(d]]$ is $(d]$. Further, if $x, y \geqq d$ and $x \equiv y$ $(\Theta[(d]])$, then $x = y$, because $x \cup y = [(x \cap y) \cup d] \cap (x \cup y) = x \cap y$. From these facts we will use only the following:

(*) If $a \leqq b \leqq d \leqq c \leqq e$ and d is a distributive element, then $\overline{a, b} \to \overline{c, e}$ implies $c = e$.

Indeed, under the stated conditions, $\overline{a, b} \to \overline{c, e}$ implies $c \equiv e$ $(\Theta[(d]])$, and so $c = e$.

Now let d be a distributive element of the weakly modular lattice L. First we prove that d is standard, that is, we prove the validity of (9). Suppose (9) does not hold for a fixed couple $x, y \in L$. Then

$$x \cap (d \cup y) > (x \cap d) \cup (x \cap y).$$

Denote by a the left member of this inequality and by b the right member. We prove that

$$\overline{d, d \cap x} \to \overline{a, b}, \tag{11}$$

namely,

$$\overline{d, d \cap x} \xrightarrow{1} \overline{(d \cup x) \cap (d \cup y), b} \xrightarrow{1} \overline{a, b}.$$

Indeed, because of $d \cap x \leqq b$ we have to prove for the validity of

$$\overline{d, d \cap x} \xrightarrow{1} \overline{(d \cup x) \cap (d \cup y), b} \quad \text{only} \quad d \cup b = (d \cup x) \cap (d \cup y).$$

But $d \cup b = d \cup (x \cap d) \cup (x \cap y) = d \cup (x \cap y) = (d \cup x) \cap (d \cup y)$, for d is distributive. Now, using the inequalities $a \leqq (d \cup x) \cap (d \cup y)$ and $a > b$, we see that $b = b \cap a$ and $a = (d \cup x) \cap (d \cup y) \cap a$ are trivial. Thus

$$\overline{(d \cup x) \cap (d \cup y), b} \xrightarrow{1} \overline{a, b}$$

and (11) is proved.

Next we verify that

$$\overline{d, d \cup y} \to \overline{a, b}, \tag{12}$$

namely

$$\overline{d, d \cup y} \xrightarrow{1} \overline{d \cap x, a} \xrightarrow{1} \overline{a, b}.$$

To prove the first part of this statement, we have to show only $a \cap d = d \cap x$, but $a \cap d = d \cap x \cap (d \cup y) = d \cap x$. The second part of the assertion is clear.

Let us use the condition $a > b$ and the weak modularity of L: from these it follows the existence of elements u, v for which

$$\overline{a, b} \to \overline{u, v}, \quad d \leqq v < u \leqq d \cup y. \tag{13}$$

From (11) and (13) it follows $\overline{d, d \cap x} \to \overline{u, v}$, in contradiction to (*). Thus we have got a contradiction from $a > b$, so $a = b$, i.e. d is standard.

The second step of the proof is: using that d is standard, we prove that it is neutral.

If this statement is not true, then by Lemma 10 we conclude the existence of elements x, y of L such that

$$d \cap (x \cup y) > (d \cap x) \cup (d \cap y),$$

i.e. the condition (i') of Theorem III does not hold. Putting $s_1 = d \cap (x \cup y)$ and $s_2 = (d \cap x) \cup (d \cap y)$ let us suppose $s_1 > s_2$. First we prove that

$$s_1 \cup x > s_2 \cup x \quad \text{and} \quad s_1 \cup y > s_2 \cup y.$$

Suppose that one of these does not hold, for instance, $s_1 \cup x \not> s_2 \cup x$; then from $s_1 > s_2$ we have $s_1 \cup x = s_2 \cup x$. We will see that it follows $\overline{d \cap x, x} \to \overline{s_1, s_2}$, namely

$$\overline{d \cap x, x} \xrightarrow{1} \overline{s_2 \cup (d \cap x), s_2 \cup x} \xrightarrow{1} \overline{s_1, s_2}.$$

To prove this it is enough to show that $s_1 \cap [s_2 \cup (d \cap x)] = s_2$ and $s_1 \cap (s_2 \cup x) = s_1$ Indeed, $s_1 \cap [s_2 \cup (d \cap x)] = s_1 \cap s_2 = s_2$ and $s_1 \cap (s_2 \cup x) = s_1 \cap (s_1 \cup x) = s_1$ (we have used $s_1 \cup x = s_2 \cup x$ in this step). Again from $s_1 > s_2$ and from the weak modularity it follows the existence of elements u, v with $d \cap x \leqq u < v \leqq x$ and $\overline{s_1, s_2} \to \overline{u, v}$. But $s_1, s_2 \leqq d$, and so $s_1 \equiv s_2$ (Θ_d), consequently $u \equiv v$ (Θ_d). Therefore (see condition (γ) of Theorem 1) $v = u \cup d_1$ with a suitable $d_1 \leqq d$. Then $v = u \cup d_1 \leqq u \cup (d \cap x) = u$, for we get from $v = u \cup d_1$ that $d_1 \leqq v \leqq x$, and hence $d_1 \leqq d \cap x$. The inequality we have just proved is in contradiction to the hypothesis $v > u$. Thus we have proved that $s_1 \cup x > s_2 \cup x$, and in a similar way one can prove $s_1 \cup y > s_2 \cup y$.

Now, using $s_1 \cup x > s_2 \cup x$ and $s_1 \cup y > s_2 \cup y$, we prove that

$$\overline{d \cap (s_2 \cup x), s_2 \cup x} \to \overline{s_1 \cap (s_2 \cup y), s_1},$$

namely,

$$\overline{d \cap (s_2 \cup x), s_2 \cup x} \xrightarrow{1} \overline{d \cap x, x} \xrightarrow{1} \overline{s_2 \cup y, s_2 \cup (x \cup y)} \xrightarrow{1} \overline{(s_2 \cup y) \cap s_1, s_1}.$$

From these $\overline{d \cap (s_2 \cup x), s_2 \cup x} \xrightarrow{1} \overline{d \cap x, x}$ is clear. To verify $\overline{d \cap x, x} \xrightarrow{1} \overline{s_2 \cup y, s_2 \cup (x \cup y)}$ we use the inequality $d \cap x \leqq (d \cap x) \cup (d \cap y) = s_2 \leqq s_2 \cup y$, and so $(d \cap x) \cup (s_2 \cup y) = s_2 \cup y$, further $x \cup (s_2 \cup y) = s_2 \cup (x \cup y)$. To prove $\overline{s_2 \cup y, s_2 \cup (x \cup y)} \xrightarrow{1} \overline{(s_2 \cup y) \cap s_1, s_1}$ we have only to observe the inequality $s_1 = d \cap (x \cup y) \leqq s_2 \cup (x \cup y) = x \cup y$, and then $[s_2 \cup (x \cup y)] \cap s_1 = s_1$.

Before applying weak modularity we have to show that $s_1 \neq s_1 \cap (s_2 \cup y)$. Indeed, in case $s_1 = s_1 \cap (s_2 \cup y)$ it follows $s_1 \leqq s_2 \cup y$, and then $s_1 \cup y = s_2 \cup y$, which is a contradiction to $s_1 \cup y > s_2 \cup y$. From this we see that $d \cap (s_2 \cup x) = s_2 \cup x$ is also impossible, for $\overline{d \cap (s_2 \cup x), s_2 \cup x} \to \overline{s_1 \cap (s_2 \cup y), s_1}$, and so $d \cap (s_2 \cup x) = s_2 \cup x$ implies $s_1 \cap (s_2 \cup y) = s_1$. Now, using the weak modularity and $\overline{d \cap (s_2 \cup x), s_2 \cup x} \to \overline{s_1 \cap (s_2 \cup y), s_1}$, it follows the existence of u, v such that $d \cap (s_2 \cup x) \leqq u < v \leqq s_2 \cup x$ and $\overline{s_1 \cap (s_2 \cup y), s_1} \to \overline{u, v}$. It follows now $u \equiv v\ (\Theta_d)$ in a similar way as in the first step of the proof, thus $v = u \cup d'\ (d' \leqq d)$. But from $v \leqq s_2 \cup x$ we have $d' \leqq d \cap (s_2 \cup x)$ for $d \geqq s_1 > s_2$. Consequently, $v = u \cup d' \leqq u \cup [d \cap (s_2 \cup x)] = u$, a contradiction to $v > u$.

Thus we have verified the validity of the conditions of Theorem III, thus d is neutral. The proof of Theorem 7 is completed.

COROLLARY 1. *In a weakly modular lattice every standard element is neutral.*

The assertion is clear from condition (δ) of Theorem 1.

Apply this theorem to $I(L)$:

COROLLARY 2. *If $I(L)$ is weakly modular, then any standard ideal of L is neutral.*

COROLLARY 3. *In a relatively complemented lattice L any standard element is neutral.*

COROLLARY 4. *In a modular lattice any standard element and ideal is neutral.*

Corollaries 3 and 4 are immediate consequences of Lemma IV.

Unfortunately, we cannot establish Theorem 7 for distributive ideals, not even the more important Corollary 1 for standard ideals. A detailed discussion of the proof shows that the idea of the proof essentially uses that distributive, resp. standard elements are dealt with and not distributive, resp. standard ideals. It will be clear from § 4 of this chapter that we cannot get the results for ideals by a simple application of Theorem 7 to $I(L)$.

We shall now deal separately with (standard, i. e.) neutral elements of a special class of weakly modular lattices. We intend to show that in relatively complemented lattices the set of all neutral elements is again a relatively complemented lattice. First we prove

LEMMA 14. *Let a, b, c be neutral elements of a lattice L, and suppose $a < b < c$. If a relative complement d of b in the interval $[a, c]$ exists, then it is also neutral and uniquely determined.*

PROOF. We know from Theorem 6 that we can embed L in $L_b = (b] \times [b)$ under the correspondence $x \to (x \cap b, x \cup b)$. Under this $d \to (a, c)$, therefore d

is neutral (for both components of d are neutral) in L_b, and consequently it is neutral in L. The unicity assertion is trivial.

COROLLARY 1. (BIRKHOFF.) *Any complement of a neutral element is neutral.*

COROLLARY 2. *The neutral elements (if any) of a relatively complemented lattice form a relatively complemented distributive sublattice.*

We note that from Corollary 1 we do not get Lemma 14, only that d is neutral in $[a, c]$.

Lemma 14 is not true for standard elements. As an example take the lattice U where o, p, i are standard, while (the unique) relative complement of p in $[o, i]$ is r which is not standard.

PROBLEM 5. Is a distributive (or at least a standard) ideal of a weakly modular lattice neutral?

§ 3. A neutrality condition for standard elements

The last statement of Lemma 10 gives a necessary and sufficient condition for a standard element to be neutral. The condition is not trivial, for it is a conclusion of the comparison of the deep Theorem III with condition (δ) of Theorem 1. But in the previous paragraph, when we wanted to prove the coincidence of standard and neutral elements in weakly modular lattices, we have seen that this condition is not easy to apply. Therefore we set ourselves the aim of finding a sharper condition from which Corollary 1 of Theorem 7 may be easily derived. This is the content of

THEOREM 8. *A standard element s of the lattice L is neutral if and only if $a \geqq b \geqq s \geqq c \geqq e$ and $\overline{a, b} \to \overline{c, e}$ imply $c = e$.*

To prove the "only if" part of the theorem, suppose s is neutral. Then the dual ideal $[s)$ — as an ideal of the dual lattice $\tilde{L}$ — is standard. So it is impossible that a congruence of the form $c \equiv e$ (Θ_s) would hold in the dual lattice $\tilde{L}$, thus $c = e$.

Now we interrupt our proof to observe that the property (*) (stated in the previous section) is characteristic for distributive elements. Indeed, if d is not distributive, then there exist x, y with $d \cup (x \cap y) < (d \cup x) \cap (d \cup y)$. We prove that $d \cup (x \cap y) \equiv (d \cup x) \cap (d \cup y)$ $(\Theta[(d]])$. Indeed, $d \equiv d \cap x \cap y$ $(\Theta[(d]])$. Joining both sides of this relation first with x, then with y, we get

$$d \cup x \equiv x \quad (\Theta[(d]]) \quad \text{and} \quad d \cup y \equiv y \quad (\Theta[(d]]).$$

Meeting the corresponding sides, it results

$$(d \cup x) \cap (d \cup y) \equiv x \cap y \quad (\Theta[(d]])$$

Finally, joining both sides with d, we reach $(d \cup x) \cap (d \cup y) \equiv d \cup (x \cap y)$ $(\Theta[(d]])$, as desired.

Now we prove the "if" part of Theorem 8 If s is not neutral, then s is not distributive in the dual lattice $\tilde{L}$. We may apply the result just obtained to get the existence of $a \leqq b \leqq s \leqq c \leqq e$ in $\tilde{L}$ with $\overline{a, b} \to \overline{c, e}$. This is the same as the required relation in L, completing the proof of Theorem 8.

From the proof we see that the fact that standard elements and not ideals are dealt with, is again very essential.

Suppose that in the lattice L the following condition holds which is a weakened form of weak modularity:

(14) whenever $a > b \geqq c > d$ and $\overline{a, b} \to \overline{c, d}$, then $\overline{c, d} \to \overline{a_1, b_1}$ with suitable elements $a \geqq a_1 > b_1 \geqq b$.

COROLLARY 1. *If the lattice L satisfies* (14), *then every standard element in L is neutral.*

PROOF. Suppose L satisfies (14) and $s \in L$ is standard, but not neutral. Then, owing to Theorem 8 we can find elements $a > b \geqq s \geqq c > d$ such that $\overline{a, b} \to \overline{c, d}$. Now, applying (14), we infer the existence of a pair of elements a_1, b_1 such that $a \geqq a_1 > b_1 \geqq b$ and $\overline{c, d} \to \overline{a_1, b_1}$. Consequently, $a_1 \equiv b_1$ (Θ_s), which is impossible, since $a_1 > b_1 \geqq s$ and s is standard.

Since condition (14) is a generalization of weak modularity, it follows that the last corollary implies Corollary 1 of Theorem 8. We will prove by means of a simple example that this new corollary is stronger than the former one, that is, there exists a not weakly modular lattice L which satisfies (14).

Let L be the lattice defined in § 2 of Chapter II. We adjoin three new elements: $x, 0, 1$, subject to the following relations:

$$x \cup a = 1, \quad x \cap a = 0$$

for all $a \in L$. We get a lattice H whose diagram is given in Fig. 5. In this lattice $\overline{0, x} \to \overline{(2, 0), (1, 0)}$ and despite this fact $\overline{(2, 0), (1, 0)} \to \overline{u, v}$ holds for no $u, v \in L$ for which $x \geqq u > v \geqq 0$. This can be seen from the fact that the two different elements of the interval $[0, x]$ are not congruent modulo $\Theta_{(2,0)(1,0)}$. Consequently, H is not weakly modular. But condition (14) holds in H. Indeed, within L it holds, for L is simple (see Lemma IV). The only remaining case of interest is $1 > a \geqq b > c$ $(a, b, c \in L)$, when $\overline{1, a} \to \overline{b, c}$ always holds. But in this case $\overline{b, c} \to \overline{a, d}$ where d is an arbitrary element with $1 > d \succ a$.

In this counterexample (14) holds and so does the dual of (14). It is easy to show that any counterexample of this kind is infinite.

LEMMA 15. *Let L be a semi-discrete lattice in which* (14) *and its dual hold. Then L is weakly modular.*

PROOF. Let $a, b, c, d \in L$, $a > b$, $c > d$ and $d \cap a = b$, $d \cup a \geqq c$. Then $\overline{a, b} \to \overline{c, d}$. If $c = d \cup a$, then simply $\overline{c, d} \xrightarrow{1} \overline{a, b}$. If $c < d \cup a$, we choose an element x with $c \leqq x \prec d \cup a$. Then $\overline{x, d \cup a} \xrightarrow{1} \overline{a, b} \xrightarrow{2} \overline{c, d}$, i.e. $\overline{x, d \cup a} \to \overline{c, d}$ and $d \cup a > x \geqq c > d$. Using (14) we get $\overline{c, d} \to \overline{u, v}$ with suitable $d \cup a \geqq u > > v \geqq x$. But $d \cup a \succ x$, therefore $u = d \cup a$, $v = x$, that is, $\overline{c, d} \to \overline{x, d \cup a}$. Trivially, $\overline{x, d \cup a} \to \overline{a, b}$, and so $\overline{c, d} \to \overline{a, b}$.

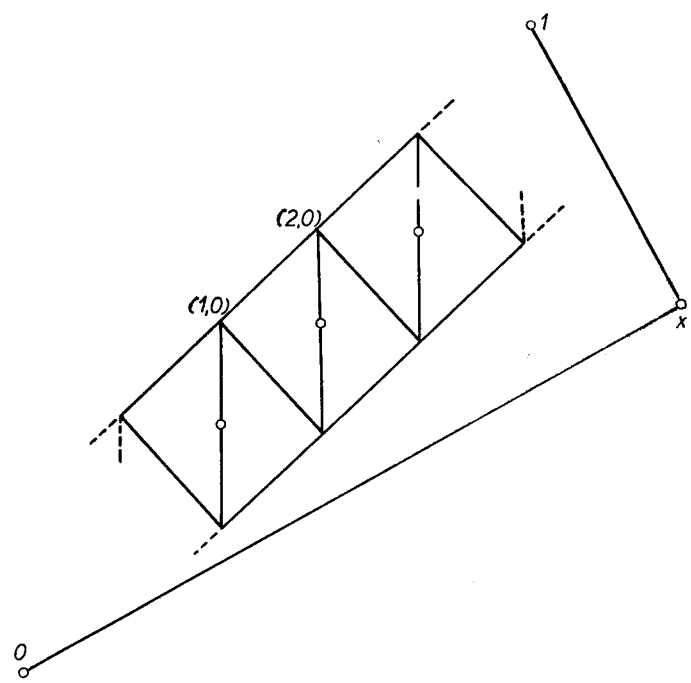

Fig. 5

In case $a > b, c > d, b \cup c = a$ and $b \cap c \leqq d$, the relation $\overline{a, b} \to \overline{c, d}$ holds, and then we can verify weak modularity by the dual of the above reasoning. The general case $\overline{a, b} \xrightarrow{n} \overline{c, d}$ may be deduced using a simple induction on n.

We see that in Lemma 15, instead of the semi-discreteness of the lattice L, we have used the following weaker property: if $a > b$, then there exist x and y with $a \succ x \geqq b$ and $a \geqq y \succ b$.

PROBLEM 6. Is (14) equivalent to weak modularity in finite lattices?

§ 4. On the lattice of all ideals of a weakly modular lattice

In § 2 the problem arose: why is it not possible to get the results of Theorem 7 for distributive and standard ideals by a simple application of the theorem to $I(L)$. In general, a way of getting a theorem for standard ideals is to prove the same first for standard elements. For instance, we got in this way the coincidence of standard and neutral ideals in modular lattices.

Whenever we make a step of this kind we have to ponder over the question: did we make a supposition on the lattice L which is not preserved if we pass from L to $I(L)$? In case of modular lattices there is no trouble, for if L is modular, then so is $I(L)$. But this is not the case in weakly modular lattices:

THEOREM 9. *The lattice of all ideals of a weakly modular lattice is not necessarily weakly modular.*

PROOF. We have to construct a weakly modular lattice K such that $I(K)$ is not weakly modular. Consider the chain of non-negative integers and take the direct product of this chain by the chain of two elements. The elements of this lattice are of the form $(n, 0)$ and $(n, 1)$, where 0 and 1 are the zero and unit elements of **2** and n is an arbitrary non-negative integer. Further, we define the elements x_n $(n = 1, 2, \ldots)$ satisfying the following relations:

$$x_n \cup (n-1, 1) = x_n \cup (n, 0) = (n, 1),$$
$$x_n \cap (n-1, 1) = x_n \cap (n, 0) = (n-1, 0).$$

Thus we have got a lattice L. Finally, we define three further elements $x, y, 1$ subject to

$$\left.\begin{aligned} x \cup y = x \cup z = y \cup z = 1, \\ x \cap y = x \cap z = y \cap z = (0,0) \end{aligned}\right\} \qquad (z \neq 0,\ z \in L).$$

Denote the partially ordered set of all these elements by K. The elements of K are denoted by $\circ$ in Fig. 6.

It is easy to see that K is a lattice. K is simple and so, by Lemma IV, weakly modular. All but two ideals of K are principal ideals, these exceptional ones are denoted by $\odot$ in the diagram, thus the diagram of K, completed by these two elements, gives the diagram of $I(K)$. Now, it is easy to see that K is not weakly modular. Indeed, under the congruence relation generated by the congruence of the two new elements, no two different elements of K are congruent. While from the congruence of any two different elements of K it follows the congruence of the two new elements, we have considered K to be imbedded in $I(K)$. The existence of the lattice K proves Theorem 9.

Some related unsolved problems are listed at the end of this section.

So far we could assure the weak modularity only of the lattice of all ideals of a modular lattice. Naturally, the same is true for every weakly modular lattice in which the ascending chain condition holds, because in this case the lattice of all ideals is identical with (more precisely isomorphic to) the original lattice. The following question arises: is it possible that the lattice of all ideals of a relatively complemented lattice is weakly modular if in the lattice the ascending chain condition does not hold? Is it possible

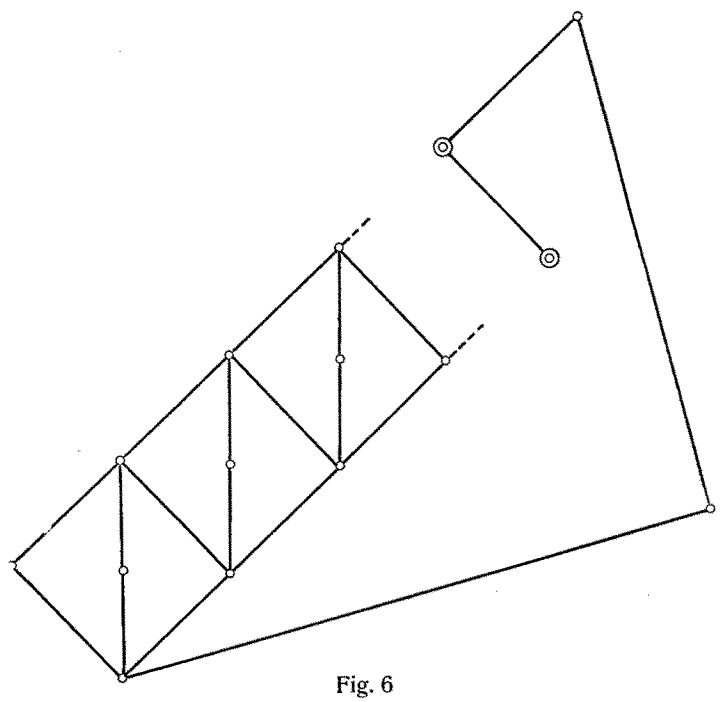

Fig. 6

that the ideal lattice of the same is relatively complemented? The interest of this latter question is that in modular lattices the answer is always negative as a consequence of a theorem of HASHIMOTO [15]. Despite this, the following assertion is true:

There exists a relatively complemented lattice L, not satisfying the ascending chain condition, such that $I(L)$ is relatively complemented. This lattice may be chosen to be semi-modular.

To construct L, consider an infinite set H. We say that the partition p of H, which devides the set H into the disjoint subsets H_α, is finite, if

all but a finite number of the H_α consist of one element, and every H_α consists of a finite number of elements. We denote by $FP(H)$ the set of all finite and by $P(H)$ the set of all partitions of H.

It is clear that the join and meet of any two finite partitions are finite again, and if a partition is smaller than a finite partition, then it is also finite. It follows that $FP(H)$ is an ideal of the lattice $P(H)$. Now, it is easy to prove that just the finite partitions are the elements of the lattice $P(H)$ which are inaccessible from below. Indeed, if p is a finite partition, then the interval $[\omega, p]$ of the lattice $P(H)$ is finite, therefore p is inaccessible from below. Now suppose p is not finite, and let $\{H_\alpha\}$ be the corresponding partition of H (the H_α are pairwise disjoint). Either infinitely many H_α are containing more than one element, or at least one H_α contains an infinity of elements. In the first case, assume that $H_1, H_2, \ldots$ contain more than one element. We define the partition p_i to be the same as p on the set $H \setminus \bigvee_{j=i+1}^{\infty} H_j$, while on the set $\bigvee_{j=i+1}^{\infty} H_j$ let all the classes of p_i consist of one element. Obviously, $p_1 < p_2 < \cdots$ and $\bigvee p_i = p$, consequently, p is accessible from below. In the second case, let H_1 be a set which contains infinitely many elements $\{x_1, x_2, \ldots\}$. We define the partition p_i: upon the set $H \setminus H_1$ it is the same as p, $\{x_1, \ldots, x_i\}$ is one class, and all the x_n $(n > i)$ form separate classes. Again, $p_1 < p_2 < \cdots$ and $\bigvee p_i = p$, so p is accessible from below.

It is also clear that every partition is the complete join of finite partitions and, finally, it is well known (it follows trivially from Lemma III) that $P(H)$ is meet continuous. It follows from a theorem of KOMATU [17] that $P(H)$ is isomorphic to the lattice of all ideals of $FP(H)$.

Now we will prove that $FP(H)$ satisfies the requirements. We have to prove yet that in $FP(H)$ the ascending chain condition does not hold, that $FP(H)$ and $P(H)$ are relatively complemented, and finally that $FP(H)$ is semi-modular. The first of these assertions is trivial, since H is infinite. The second and the third assertions have been proved in [25] for $P(H)$, but these properties are preserved under taking an ideal of the lattice, therefore these hold in $FP(H)$.

We could assure the weak modularity of the ideal lattice of a modular lattice, for the modularity of a lattice may be defined by an equality. We now show that if the weak modularity of a lattice is a consequence of the fulfilment of a system of equalities, then the ideal lattice is also weakly modular. First we prove a general theorem which will serve for other purposes as well.

To formulate the theorem we need two notions. Following ORE [25] we

§ 2. Neutral elements as elements with unique relative complements

A theorem of J. VON NEUMANN (see [6]) asserts that an element n of a complemented modular lattice L is neutral if and only if its complement is unique. In modular lattices the same assertion does not hold in general; the element a of the lattice of Fig. 14 is uniquely complemented, but it is not neutral. This observation is due to HALL (see [6]). Applying twice Ex. 2 of p. 115 of [6] we get[8] that an element n of a complemented modular lattice L is uniquely complemented if and only if it is uniquely relatively complemented, that is, if it has just one relative complement in any interval containing n. In this way it is possible to generalize NEUMANN's theorem to arbitrary modular lattices.

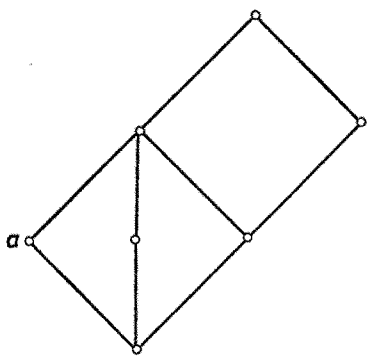

Fig. 14

THEOREM 19. *An element n of a modular lattice L is neutral if and only if it has at most one relative complement in any interval containing it.*

PROOF. If n is neutral, then by condition (ii) of Theorem III it obviously satisfies the stated condition.

Let n be an element of the modular lattice L, and x, y arbitrary elements of L. The free modular lattice FML 3), generated by n, x, y, according to a theorem of BIRKHOFF [6] is given in Fig. 15. If n satisfies the condition of Theorem 19, then $u \equiv v$, for u and v are the relative complements of a in the interval $[a \cap u, a \cup u]$. It follows that the lattice generated by a, x and y must be a homomorphic image of $FML(3)(\Theta_{uv})$. But $FML(3)(\Theta_{uv})$ is distributive and it follows that n is neutral, as asserted.

COROLLARY 1. (Theorem of NEUMANN.) *In a complemented modular lattice an element n is neutral if and only if it has precisely one complement.*

Indeed, as we have remarked above, in complemented modular lattices an element n is uniquely relatively complemented if and only if it is uniquely complemented. Hence the corollary.

COROLLARY 2. *An element n of the modular lattice L is neutral if it is neutral in every interval $[n \cap x, n \cup x]$ $(x \in L)$.*

Corollary 2 is an immediate consequence of Theorem 19.

In weakly modular lattices Theorem 19 fails to be valid. In the lattice of Fig. 16 the element a is uniquely relatively complemented, but not neutral.

[8] See also [32].

Corollary 2 is obviously true in relatively complemented and in complemented lattices. For if L is relatively complemented and $n \in L$ is neutral in any $[n \cap x, n \cup x]$ $(x, y \in L)$, then let a be a relative complement of n in $[n \cap x \cap y, n \cup x \cup y]$. Since n is neutral in $[n \cap a, n \cup a]$, $\{n, x, y\}$ is a distributive lattice, and so n is neutral. But Corollary 2 is not true in general. Consider the lattice of Fig. 17. In this lattice a is not neutral, but it is in every interval of the form $[a \cap x, a \cup x]$.

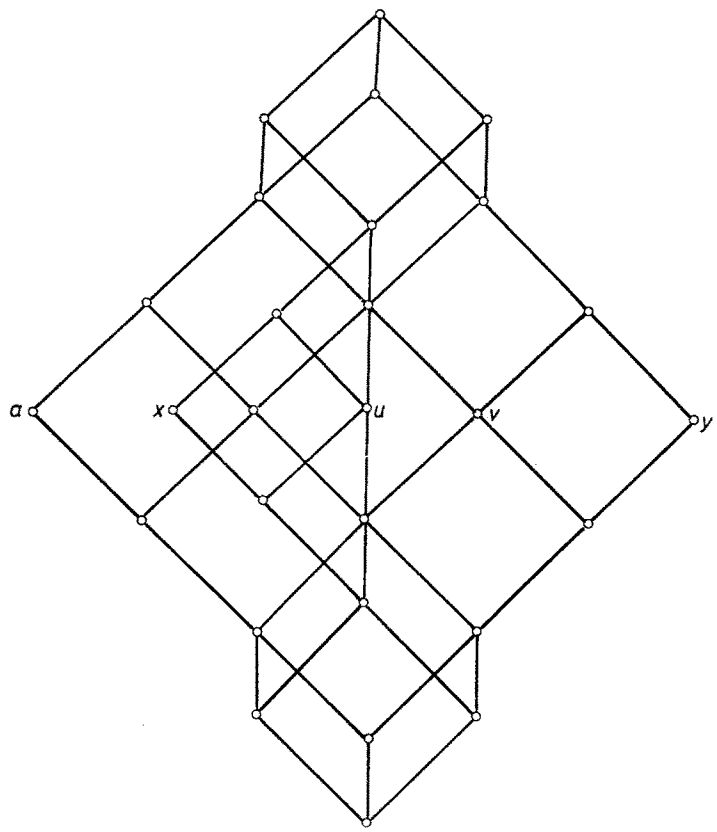

Fig. 15

PROBLEM 16. Is the assertion of Theorem 19 true in relatively complemented lattices?

PROBLEM 17. Is the assertion of Corollary 2 of Theorem 19 true in weakly modular lattices?

NOTE. The corresponding assertion for standard elements is not true. If $s \in L$ is locally standard (i. e. standard in every interval $[s \cap x, s \cup x]$) and

L is weakly modular, it does not follow that s is standard, as shown by the lattice of Fig. 18.

PROBLEM 18. Call an element s of L a *standard element of order two* if it is a standard element of a standard ideal of S. Do the standard elements of order two form a sublattice of L? Characterize the standard elements of order two. What can be said of the standard elements of higher order?

REMARK. The following theorem may be useful: if s is a standard element of order two of L, then there is a unique maximal standard ideal S such that s is standard in S.

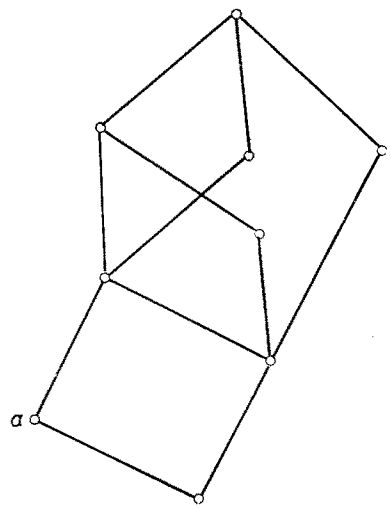

Fig. 16

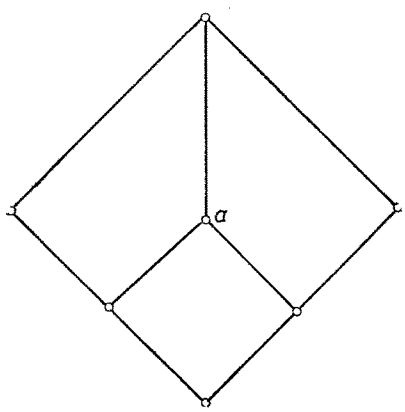

Fig. 17

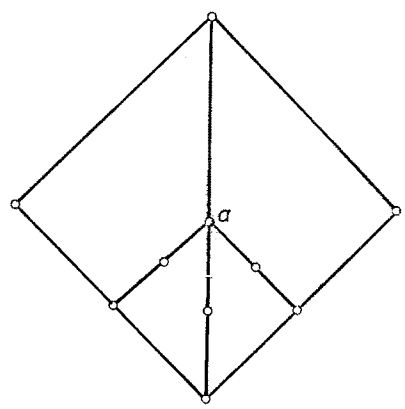

Fig. 18

CHAPTER VI

IDEALS SATISFYING THE FIRST ISOMORPHISM THEOREM

§ 1. The case of relatively complemented lattices with zero satisfying the ascending chain condition

In this section we want to prove the following theorem:

THEOREM 20. *Let L be a relatively complemented lattice with zero in which the ascending chain condition holds. An ideal I of the lattice L satisfies the first isomorphism theorem, i. e.*

$$I \cup K/I \cong K/I \cap K$$

for all ideals K of L if and only if I is neutral.

PROOF. If I is neutral, then from Theorem 13 it follows that it satisfies the first isomorphism theorem. Now let us suppose that the ideal I of the relatively complemented lattice L with the ascending chain condition satisfies the first isomorphism theorem. By the structure theorem of DILWORTH, $L = L_1 \times \cdots \times L_k$ with simple lattices L_j, and consequently, $I = I_1 \times \cdots \times I_k$ with $I_j \subseteq L_j$ $(j = 1, \ldots, k)$. We prove that I satisfies the first isomorphism theorem if and only if every I_j satisfies in L_j the first isomorphism theorem. This is an immediate consequence of the following identity:

$$L/I \cong L_1/I_1 \times \cdots \times L_k/I_k.$$

Hence we have reduced the question to the case of simple relatively complemented lattices. Instead of this we shall now consider a bit more general class of lattices, which will lead not only to the proof of Theorem 20, but at the same time to a generalization of it:

LEMMA 17. *Let L be a complemented simple lattice. No principal ideal of L except for* $(0]$ *and* $(1]$ *satisfies the first isomorphism theorem.*

PROOF. Let $a \in L$, and b the complement of a. Applying the first isomorphism theorem, we get

$$(a \cup b]/(a] \cong (b]/(a \cap b].$$

The left member is isomorphic to the lattice of one element (except $a = 0$) and the right member is isomorphic to the principal ideal $(b]$. This is a contradiction, unless $a = 0$ or $b = 0$, as stated.

Lemma 17, compared to the arguments we have made above (using the structure theorem given in Corollary 4 of Theorem 11), leads to the following generalization of Theorem 20:

THEOREM 21. *Let L be a section complemented weakly modular lattice with the ascending chain condition. An ideal I of L satisfies the first isomorphism theorem if and only if it is neutral.*

COROLLARY. *Let I be a section complemented weakly modular lattice satisfying the ascending chain condition (for instance, a finite relatively complemented lattice) in which the first isomorphism theorem unrestrictedly holds. Then I is a finite Boolean algebra.*

In § 3 we shall show that the assertion of Theorem 20 holds in finite modular lattices as well. But it is not already true for finite weakly modular lattices. Fig. 17 shows a lattice L which is simple. The dual $\tilde{L}$ of L has an element $s \neq 0, 1$ which is locally standard[9] and thus it satisfies the first isomorphism theorem.

§ 2. A general theorem

In the following section we want to prove that the conclusion of Theorem 20 holds in modular lattices of locally finite length with zero. In this section we prove a general theorem which characterizes the ideals satisfying the first isomorphism theorem in certain classes of lattices which are a little more general than the class of finite lattices. The condition of this theorem is rather difficult, but starting from this, we shall be able to solve the problem in modular lattices of locally finite length with zero.

First we turn our attention to proving two lemmas of preliminary character.

LEMMA 18. *Let L be a lattice of finite length and let L satisfy the Jordan—Dedekind chain condition. Then $L(\Theta) \cong L$ $(\Theta \in \Theta(L))$ implies $\Theta = \omega$, that is, no proper homomorphic image of L is isomorphic to L.*

PROOF. Suppose $\Theta \neq \omega$ and $L(\Theta) \cong L$. Then there exist $a, b \in L$ such that $a > b$ and $a \equiv b$ (Θ). Let C be a maximal chain of length n such that $a, b \in C$. The image of C under Θ is a maximal chain of $L(\Theta)$, and its length is at most $n-1$, for the homomorphic images of a and b are the same. From the isomorphism $L \cong L(\Theta)$ it follows that the Jordan—Dedekind chain condition holds in $L(\Theta)$, and consequently the length of $L(\Theta)$ is at most $n-1$. Since the length of the original lattice is n, therefore this contradicts the isomorphism of L and $L(\Theta)$.

COROLLARY. *Let L be a lattice of finite length and suppose that every homomorphic image of L satisfies the Jordan—Dedekind chain condition. Then $\Theta, \Phi \in \Theta(L)$ and $\Theta \geqq \Phi$, further $L(\Theta) \cong L(\Phi)$ imply $\Theta = \Phi$.*

[9] See the definition in the Note after Problem 17.

We remark that the conclusion of Lemma 18 does not hold if the Jordan—Dedekind chain condition is not presupposed. An example is given by Fig. 19. Let Θ be the congruence relation Θ_{ab}. Then $\Theta_{ab} > \omega$ and $L(\Theta_{ab}) \simeq L$.

A generalization of the first isomorphism theorem is a homomorphism theorem which is always true:

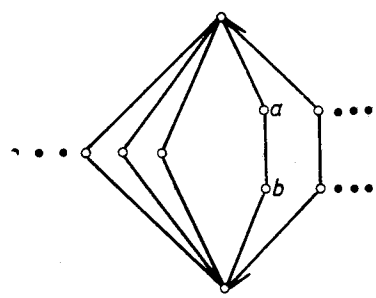

Fig. 19

LEMMA 19. *Let I and K be arbitrary ideals of L. Then we have*

$$K \sim K/I \cap K \sim I \cup K/I.$$

SUPPLEMENT 1. *A natural congruence relation Θ_1 of K under which $K(\Theta_1) \simeq K/I \cap K$ may be given in the following way: the elements a, b of K are congruent under Θ_1 if and only if there exist $u, v \in I \cap K$ and $a \cup b = x_0 \geqq x_1 \geqq \cdots \geqq x_n = a \cap b$ such that $\overline{u, v} \to \overline{x_{i-1}, x_i}$ $(i = 1, 2, \ldots, n)$ within K.*

SUPPLEMENT 2. *A natural congruence relation Θ_2 of K under which $K(\Theta_2) \simeq I \cup K/I$ may be given as follows: the elements a, b of K are congruent under Θ_2 if and only if there exist $u, v \in I$ and $a \cup b = y_0 \geqq y_1 \geqq \geqq \cdots \geqq y_n = a \cap b$ such that $\overline{u, v} \to \overline{y_{i-1}, y_i}$ $(i = 1, 2, \ldots, n)$ within $I \cup K$.*

Without loss of generality we may suppose $L = I \cup K$. Consider the congruence relation $\Theta[I]$. This makes a partition of K into congruence classes and, obviously, this partition of K is compatible. Consider the congruence relation Θ^* of K which induces the same partition on K. We assert that

$$I \cup K/I \simeq K(\Theta^*).$$

From the first general isomorphism theorem we get that it is enough to prove that every congruence class of $I \cup K$ modulo $\Theta[I]$ contains an element from K. Indeed, let $x \in I \cup K$, then with suitable $y \in I$ and $z \in K$ we have $x \leqq y \cup z$. We put $t = x \cap y \cap z$ $(\in I)$. Then $y \equiv t$ $(\Theta[I])$, hence $y \cup z \equiv t \cup z = z$ $(\Theta[I])$, and so $x = x \cap (y \cup z) \equiv x \cap z$ $(\Theta[I])$. Thus $x \cup z \in K$ is congruent to z modulo $\Theta[I]$.

On the other hand, denote Θ_0 the congruence relation of the lattice K generated by $I \cap K$ (i. e. $\Theta_0 = \Theta[I \cap K]$ on the lattice K). Obviously, $a \equiv b$ (Θ_0) implies $a \equiv b$ (Θ^*), that is, $\Theta_0 \leqq \Theta^*$. Thus $K(\Theta_0) \sim K(\Theta^*)$. We have already seen that $I \cup K/I \simeq K(\Theta^*)$, hence we have $K \sim K/K \cap I \sim I \cup K/I$ which was to be proved.

The assertion of the supplements is immediate if we compare the definitions of Θ^* and Θ_0 with that of Θ_2 and Θ_1 and with Theorem I and formula (3).

Now it will be easy to give the required characterization of the ideals satisfying the first isomorphism theorem.

THEOREM 22. *Suppose that every element a of L satisfies one of the following conditions:*

(a) $[0, a]$ *is a finite lattice;*

(b) *every homomorphic image of the lattice* $[0, a]$ *satisfies the Jordan—Dedekind chain condition.*

Then an ideal I of the lattice L satisfies the first isomorphism theorem with any principal ideal $K=(k]$ if and only if whenever the weak projectivity $\overline{u, v} \to \overline{x, y}$ holds within $I \cup K$, where $u, v \in I$ and $x, y \in K$, $x \succ y$, then with suitable elements w, z of $I \cap K$ the weak projectivity $\overline{w, z} \to \overline{x, y}$ holds within K.

PROOF. From the conditions it follows that if $K=(k]$ is a principal ideal, then for the lattice $[0, k]$ the conclusion of Lemma 18 is true. Indeed, if K satisfies condition (b) of Theorem 22, then the assertion follows from Lemma 18. If K satisfies condition (a) of Theorem 22, then it is a finite lattice. Let $\Theta, \Phi \in \Theta(K)$ and $\Theta < \Phi$. Then $K(\Phi)$ consists of fewer elements than $K(\Theta)$, thus $K(\Theta) \cong K(\Phi)$ is impossible.

Now, in Lemma 19 we have seen that $I \cup K/I \cong K(\Theta^*)$ and $K/I \cap K \cong \cong K(\Theta_0)$, where the congruences Θ^* and Θ_0 of K have been defined in the proof of Lemma 10. Thus, if K satisfies the first isomorphism theorem, then from the previous section and from $\Theta_0 \leqq \Theta^*$ it follows that $\Theta_0 = \Theta^*$. From conditions (a) and (b) we conclude that the lattice L is discrete, that is, any two elements $a > b$ of L may be connected by a finite maximal chain. It follows that two congruence relations, Θ_0 and Θ^*, are the same if and only if Θ_0 and Θ^* collapse the same prime intervals. But if a covers b, then in Supplement 1 of Lemma 19 we may take $n=1$ and in Supplement 2 $m=1$, and thus the coincidence of Θ_0 and Θ^* upon every prime interval is just assured by the condition of this theorem.

Conversely, if the conditions of Theorem 22 hold, then the congruence relations Θ_0 and Θ^* are the same, that is, $K(\Theta_0) \cong K(\Theta^*)$. Consequently, by Lemma 19, we get $I \cup K/I \cong K/I \cap K$, completing the proof of Theorem 22.

§ 3. Modular lattices of locally finite length with zero

The main result of this section is the following:

THEOREM 23. *Let L be a modular lattice of locally finite length with zero. An ideal I of L satisfies the first isomorphism theorem if and only if it is neutral.*

We prove a bit more than the assertion of the theorem, namely

COROLLARY. *Let L be a modular lattice with zero which is of locally finite length. The following four conditions on the ideal I of the lattice L are equivalent:*

(a) *I satisfies the first isomorphism theorem, that is, for an arbitrary ideal K of L*

$$I \cup K/I \simeq K/I \cap K;$$

(b) *I satisfies the first isomorphism theorem for an arbitrary principal ideal $K = (k]$;*

(c) *I is standard;*

(d) *I is neutral.*

We prepare the proof of this theorem with four lemmas. Among these the first is surely known, but we did not find in the literature. The most interesting of these lemmas is the third (Lemma 22) which gives the structure of an interesting free lattice.

LEMMA 20. *Let L be a locally finite modular lattice and I an ideal of L. A prime interval p of L collapses under $\Theta[I]$ if and only if it is projective to a prime interval q of I.*

PROOF. It is easy to derive this assertion from Theorem I and formula (3). A direct proof is the following: we define the relation Θ: $a \equiv b$ (Θ) $(a, b \in L)$ if and only if there exists a sequence of elements $a \cup b = y_0 \succ y_1 \succ \cdots \succ y_n = a \cap b$ such that each $[y_{i+1}, y_i]$ $(i = 0, 1, \ldots, n-1)$ is projective to a prime interval of I. All the conditions of Lemma II are trivially satisfied for Θ, thus Θ is a congruence relation and $\Theta = \Theta[I]$ is also obvious. If $a \succ b$, then $n = 1$, hence the assertion.

Let L be a modular lattice of locally finite length. Let us fix an ideal I and a prime interval p of L. By the previous lemma we can find prime intervals q in I such that $q \overset{n}{\leftrightarrow} p$. Choose a q such that n be as small as possible. For the proof of Theorem 22 it will be useful to call this smallest n the order of p relative to I. $n = 0$ means that $p \subseteq I$ and p is of infinite order if p does not collapse under $\Theta[I]$.

LEMMA 21. *Let L be a modular lattice of locally finite length. An ideal I of L is standard if and only if the orders of the prime intervals of L relative to I are* 0, 1 *or infinite.*

PROOF. If I is standard, then by condition (γ'') of Theorem 2 the assertion is obviously true.

Conversely, suppose the ideal I of L satisfies the condition. Let Θ be the relation defined in the proof of Lemma 20. If $a \equiv b$ (Θ), then there exists

a sequence of elements $a \cup b = y_0 \succ y_1 \succ \cdots \succ y_n = a \cap b$ such that each $[y_{i+1}, y_i]$ is projective to a prime interval $[a_{i+1}, a_i]$ of I. Because all the $y_{i+1}, y_i]$ are of the order 1 or 0 relative to I, it follows that we may suppose $y_{i+1} \cup a_i = y_i$. Let $x = \bigvee a_i$, then obviously $y_n \cup x = y_0$. This means that I satisfies condition (γ'') of Theorem 2 and, consequently, I is standard.

COROLLARY. *An ideal I of a modular lattice L of locally finite length is not standard if and only if there exists a prime interval p of L of order 2 relative to I.*

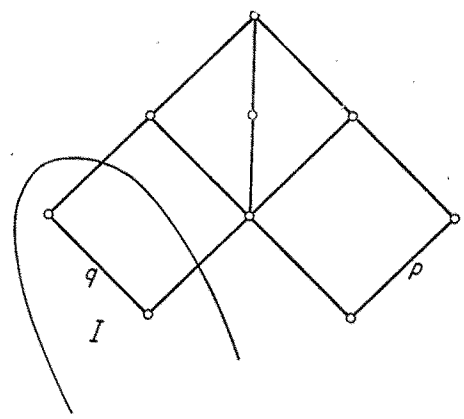

Fig. 20

The sublattice V (that is, the lattice of five elements which is modular but not distributive) is called *minimal* if its length in L is 2.

Now suppose that I is a non-standard ideal of the modular lattice L of locally finite length and consider a prime interval p of order 2, the existence of which is guaranteed by Lemma 21. It is possible that we can reach p from I in the way shown by Fig. 20. In this case the "turn" is through a minimal V. If this is the case, then we call the zero element of the minimal V a *turning element*. Consequently, if we can find to the ideal I a turning element, then I is surely not standard. The most important point of the proof of Theorem 22 is the converse of this statement. We cannot prove directly this assertion. First we have to find the most general situation which may occur in Fig. 20, that is, the corresponding free lattice.

LEMMA 22. *Let L be a modular lattice of locally finite length. I is a non-standard ideal, p a prime interval of order 2 relative to I, q a prime interval of I and $q \overset{2}{\leftrightarrow} p$, namely, $\overline{b, a} \overset{1}{\longrightarrow} \overline{f, e} \overset{1}{\longrightarrow} \overline{d, c}$, $p = [b, a]$ and $q = [d, c]$.*

The free modular lattice generated by the elements a, b, c, d and e, f is the following:

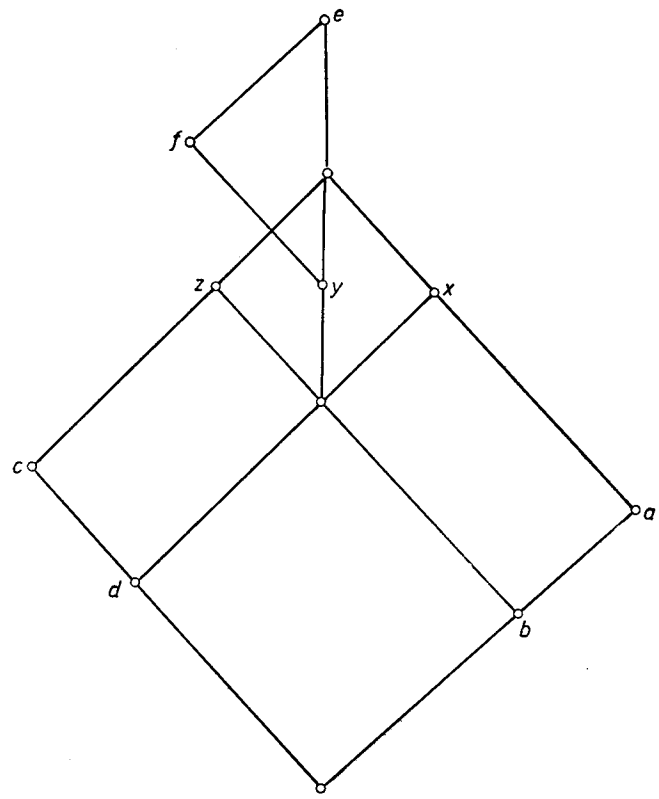

Fig. 21

REMARK. Simply to say, in Lemma 22 there is determined the free modular lattice generated by two covering pairs of elements. It is interesting the existence of this free lattice, for, in general, it is not allowed to prescribe covering relations in a free lattice.

PROOF. Consider the elements $x = a \cup d$, $y = f \cap (a \cup c)$, $z = b \cup c$, further the elements a, b, c, d, e, f, $b \cup d$, $a \cup c$, $b \cap d$. We prove that from the modularity and from the fact that the order of p relative to I is 2, finally from the covering relations it follows that these elements form a sublattice of L and all the joins and meets are the same as in Fig. 21 and these are consequences of the hypotheses.

First we show that x, y and z generate a minimal V, and

$$x \cup y = y \cup z = z \cup x = a \cup c, \quad x \cap y = y \cap z = z \cap x = b \cup d.$$

$x \cup z = a \cup c$ is clear from the definitions. We have $x \cup y = (a \cup d) \cup \cup [f \cap (a \cup c)] =$ (from $a \cup d \leqq a \cup c$ and from the modularity) $= (a \cup d \cup f) \cap \cap (a \cup c) =$ (because $a \cup f = e$) $= (d \cup e) \cap (a \cup c) = a \cup c$ for $c \leqq e$. We can get $y \cup z = a \cup c$ in a similar way.

From $x = a \cup d$ it follows that the interval $[b \cup d, x]$ is a transpose of $[b, a]$, and so it is of length 1 (we excluded the case $d \cup a = d \cup b$, for this implies $d \cap a > d \cap b$, thus $[d \cap b, d \cap a] \subseteq I$ is a transpose of $[b, a]$ the order of which relative to I is 1). Similarly, $[b \cup d, z]$ is also of length 1. Finally, $[b, a] \xrightarrow{1} [f, e] \xrightarrow{1} [y, a \cup c]$, and so $[y, a \cup c]$ is also a prime interval.

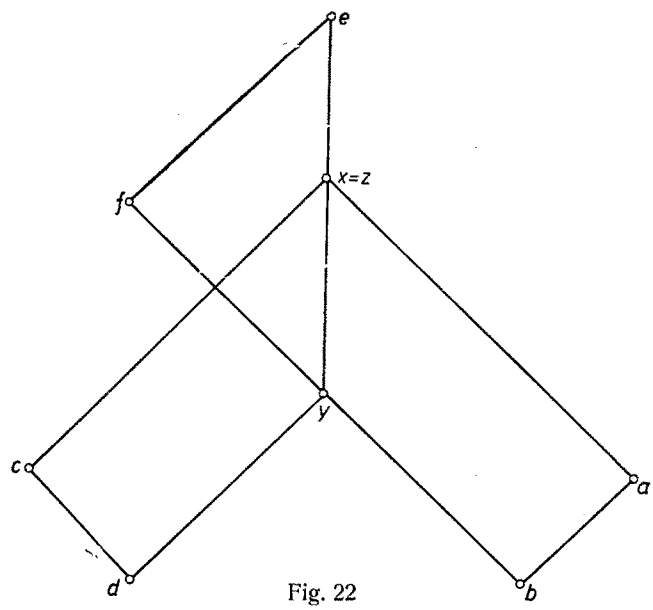

Fig. 22

We show that no two of x, y and z coincide. Suppose $x = z$. Because of $x \cup z = a \cup c$ we get $x = z = a \cup c$. Further, $[b \cup d, x]$ is a prime interval, and so $y = b \cup d$. In this case the diagram of the lattice (more precisely, a part of it) is shown by Fig. 22. We see that $a \cap c = a \cap d$ is impossible, for $a \cup c = a \cup d$ and $a \cup c = x$. Thus $[a \cap d, a \cap c]$ is a prime interval. Further, from $d \leqq y$ we get $a \cap d = a \cap y \cap d = b \cap d$. We prove that $[a \cap d, a \cap c]$ is a transpose of $[b, a]$. This will be a contradiction, for in this case the order of $[b, a]$ relative to I is 1 contrary to the hypotheses.

We have to prove that $b \cup (a \cap d) = b$ and $b \cup (a \cap c) = a$. We have $b \cup (a \cap d) =$ (from $a \cap d = b \cap d$) $= b$; further $b \cup (a \cap c) = (b \cup c) \cap a = z \cap a = a$.

The impossibility of $x = y$ is very easy to prove, for if $x = y$, then $f \geqq f \cap (a \cup c) = y = x = a \cup d \geqq a$, that is, $e = f \cup a = f$, a contradiction. We get a similar contradiction from $y = z$.

Of the remaining relations it is enough to prove $a \cap c = b \cap d$. Indeed, from $a \cap c = b \cap c$ (which is surely true, otherwise the order of $[b, a]$ relative to I were 1) and from $y \cap c = d$ we get $a \cap c = b \cap c = (y \cap b) \cap c = (y \cap c) \cap \cap b = d \cap b$. Thus the proof of Lemma 22 is completed.

Now we are able to prove the existence of turning elements.

LEMMA 23. *Let L be a modular lattice of locally finite length. An ideal I of L is non-standard if and only if there exists a turning element.*

PROOF. Using the notations of Lemma 21 and Lemma 22, consider the prime intervals $p = [b, a]$ and $q = [d, c]$ the existence of which is assured by Lemma 21. The sublattice of L generated by a, b, c, d and e, f is a homomorphic image of the free lattice of Lemma 22. Under this homomorphism, the minimal V of the free lattice does not collapse. (Indeed, if the minimal V collapsed, then both p and q would collapse.) Thus the minimal element of the minimal V may serve as a turning element.

We remark that the only congruences of the free lattice of Lemma 22, under which p does not collapse, are $\Theta_{fy}, \Theta_{xa}, \Theta_{cz}$ and their joins.

Now we are prepared for proving Theorem 23.

PROOF OF THEOREM 23. We prove the Corollary, for it is a stronger assertion than the theorem.

(c) implies (d) — this is stated in Lemma 10.

(d) implies (a) — this was proved in Theorem 13.

(a) implies (b) — this is trivial.

Thus we have to prove that (b) implies (c).

For this reason, let us suppose that L is a modular lattice with zero and of locally finite length, and I is an ideal satisfying

$$I \cup K/I \simeq K/K \cap I$$

for all $K = (k]$. If (b) does not imply (c), then I is not standard, that is, by Lemma 23 there exist turning elements in L. From the suppositions on L we obtain the existence of the dimension function $d(x)$. We denote from now on by u a turning element for which $d(u)$ is as small as possible. Finally, we denote by p and q the prime intervals (see Lemmas 22 and 23) from which the turning element u has been constructed.

Now we apply Theorem 21 to I and $(a]$. We may do so, for every interval $[0, a]$ of L satisfies the Jordan—Dedekind chain condition, and the same is true for any homomorphic image of $[0, a]$. $I \cup (a]$ contains the prime interval p, the order of which relative to I in $I \cup (a]$ is 2, for $I \cup (a]$ contains the whole minimal V because of $x \cup y \cup z = a \cup c \in (a] \cup I$. The order of p relative to $I \cap (a]$ in $(a]$ is at most 2, for if it were 1, then the order of p rela-

tive to I in $I \cup (a]$ would be also 1. Thus by Theorem 21 and Lemma 20 we can find a prime interval q_0 of $I \cap (a]$ and prime intervals $q_1, \ldots, q_n = p$ $(n \geqq 2)$ of $(a]$ such that $q_0 \xrightarrow{1} q_1 \xrightarrow{1} \cdots \xrightarrow{1} q_n = p$. Let the intervals be chosen in such a way that n be the order of p relative to $I \cap (a]$ in $(a]$. Then q_2 is of order 2 relative to $I \cap (a]$ in $(a]$. It is trivial that the order of q_2 relative to I in $I \cup (a]$ is also 2, otherwise it would be 1, and this would imply the same in $(a]$. We may now apply Lemma 23 to q_0, q_2 and $I \cap (a]$, to conclude the existence of a turning element v. This turning element of $I \cap (a]$ in $(a]$ is a turning element of I in the whole lattice, too, for q_2 is of order 2 relative to I. But the minimal V, the zero of which is the turning element v, is included in $(a]$, therefore $d(v) < d(a) - 1$. On the other hand, $d(a) \leqq d(u) + 1$, thus $d(v) < d(u)$. We have found a turning element of lower dimension than u, a contradiction to the minimality of $d(u)$. This contradiction proves the Corollary of Theorem 22 and at the same time Theorem 22.

We should point out that as a consequence of Theorem 22 we get that every ideal satisfying the first isomorphism theorem is a homomorphism kernel in modular lattices with zero and of locally finite length. We have obtained the same conclusion in section complemented weakly modular lattices with ascending chain condition in § 1 of this chapter. Thus the following problem arises:

PROBLEM 19. Give classes of lattices in which every ideal satisfying the first isomorphism theorem is a homomorphism kernel. (Does the class of weakly modular lattices serve for this purpose?)

REMARK. In general it is not true, see, for instance, the ideal $(q]$ of the lattice U.

PROBLEM 20. Does there exist a modular lattice L and an ideal I of L such that I satisfies the first isomorphism theorem and despite this

a) I is not a homomorphism kernel, or

b) I is not a neutral ideal?

§ 4. A characterization of standard ideals by the first isomorphism theorem

In the Introduction we alluded to the fact that the notion of standard ideals is the best-possible one from the point of view of the first isomorphism theorem.

To formulate precisely what this means we need some notions.

Let $\mathcal{A}$ be a class of ideals, i. e. if we are given a lattice L and an ideal I of L, then we are able to determine whether $I \in \mathcal{A}$ or not. We say

that $\mathfrak{A}$ is of type $f_\alpha = g_\alpha$ $(\alpha \in A)$ if $I \in \mathfrak{A}$ is equivalent to the fact that I is of type $f_\alpha = g_\alpha$ $(\alpha \in A)$ in the sense of § 4 of Chapter III. We say that $\mathfrak{A}$ satisfies the first isomorphism theorem if from $I \in \mathfrak{A}, I$ is an ideal of L it follows that I satisfies the first isomorphism theorem with any other ideal K of L. Finally, an ideal I of the lattice L is said to have the condition (**) if L_1/I is a sublattice of L/I under the natural mapping whenever $I \subseteq L_1 \subseteq L, L_1$ is a sublattice of L. Again, $\mathfrak{A}$ has property (**) if any of its ideals has it.

Only condition (**) needs a little explanation. It essentially requires that from the structure of L informations may be got about L/I.

For groups, (**) holds always (putting invariant subgroup instead of ideal and subgroup for sublattice).

Now we may state

THEOREM 24. *If the class $\mathfrak{A}$ of ideals*

1. *is of type $f_\alpha = g_\alpha$;*
2. *satisfies the first isomorphism theorem;*
3. *has the property* (**),

then $\mathfrak{A}$ contains only standard ideals.

The proof is easy, we have only to observe that it is an easy consequence of Theorem 10 that we may restrict ourselves to principal ideals. Now if $I = (d]$, then it may be easily proved that (*) of § 2 of Chapter III is equivalent to (**). As it was proved in § 3 of Chapter III, it follows that $\mathfrak{A}$ contains only distributive ideals. Now if d were distributive but not standard, then by Lemma 1 L would contain x, y with $x \geqq y$, $d \cup x = d \cup y$, $d \cap x = d \cap y$. By 1, $(d] \in \mathfrak{A}$ in $\{d, x, y\}$ contradicting 2.

(Received 31 December 1959)

Bibliography

[1] G. BIRKHOFF, On the combination of subalgebras, *Proc. Cambr. Phil. Soc.*, **29** (1933) pp. 441—464.

[2] G. BIRKHOFF, Combinatorical relations in finite projective geometries, *Bull. Amer. Math. Soc.*, **40** (1934), p. 209.

[3] G. BIRKHOFF, Combinatorical relations in projective geometries, *Annals of Math.*, **36** (1935), pp. 743—748.

[4] G. BIRKHOFF, On the structure of abstract algebras, *Proc. Cambr. Phil. Soc.*, **31** (1935), pp. 433—454.

[5] G. BIRKHOFF, Neutral elements in general lattices, *Bull. Amer. Math. Soc.*, **46** (1940), pp. 702—705.

[6] G. BIRKHOFF, *Lattice theory*, Amer. Math. Soc. Coll. Publ., 25 (New York, 1948).

[7] R. DEDEKIND, Über Zerlegungen von Zahlen durch ihre größten gemeinsamen Teiler, *Festschrift Techn. Hoch. Braunschweig*, 1897; *Ges. Werke*, **2**, pp. 103—148.

[8] R. P. Dilworth, The structure of relatively complemented lattices, *Annals of Math.*, **51** (1950), pp. 348—359.
[9] N. Funayama and T. Nakayama, On the distributivity of a lattice of lattice-congruences, *Proc. Imp. Acad. Tokyo*, **18** (1942), pp. 553—554.
[10] G. Grätzer and E. T. Schmidt, On ideal theory for lattices, *Acta Sci. Math. Szeged*, **19** (1958), pp. 82—92.
[11] G. Grätzer and E. T. Schmidt, Characterisations of relatively complemented distributive lattices, *Publ. Math. Debrecen*, **5** (1958), pp. 275—287.
[12] G. Grätzer and E. T. Schmidt, Ideals and congruence relations in lattices, *Acta Math. Acad. Sci. Hung.*, **9** (1958), pp. 137—175.
[13] G. Grätzer and E. T. Schmidt, On the generalized Boolean algebra generated by a distributive lattice, *Indag. Math.*, **20** (1958), pp. 547—553.
[14] J. Hashimoto, Ideal theory for lattices, *Math. Japonicae*, **2** (1952), pp. 149—186.
[15] J. Hashimoto, Direct, subdirect decompositions and congruence relations, *Osaka Math. Journal*, **9** (1957), pp. 87—112.
[16] H. Hermes, *Einführung in die Verbandstheorie* (Berlin, 1955).
[17] A. Komatu, On a characterisation of a join homomorphic transformation-lattice, *Proc. Imp. Acad. Tokyo*, **19** (1943), pp 119—124.
[18] V. S. Krishnan, Binary relations, congruences and homomorphisms, *Journ. Madras Univ.*, Ser. B, **16**.
[19] А. И. Мальцев, К общей теории алгебраических систем, Мат. Сборник, **35** (1954), pp. 3—20.
[20] J. E. McLaughlin, Projectivities in relatively complemented lattices, *Duke Math. Journal*, **18** (1951), pp. 73—84.
[21] J. E. McLaughlin, Structured theorems for relatively complemented lattices, *Pacific Journ. Math.*, **3** (1953), pp. 197—208.
[22] K. Menger, New foundations of projective and affine geometry, *Annals of Math.*, **37** (1936), pp. 456—482.
[23] O. Ore, On the foundations of abstract algebra. I—II, *Annals of Math.*, **36** (1935), pp. 406—437; **37** (1936), pp. 265—292.
[24] O. Ore, Remarks on structures and group relations, *Naturf. Gesellschaft Zürich*, **85** (1940), pp. 1—4.
[25] O. Ore, Theory of equivalence relations, *Duke Math. Journal*, **9** (1942), pp. 573—627.
[26] L. Rédei, Das "schiefe Produkt" in der Gruppentheorie mit Anwendung auf die endlichen nichtkommutativen Gruppen mit lauter kommutativen echten Untergruppen und die Ordnungszahlen, zu denen nur kommutative Gruppen gehören, *Commentarii Math. Helv.*, **20** (1947), pp. 225—264.
[27] L. Rédei, Die Anwendung des schiefen Produktes in der Gruppentheorie, *Journal f. reine u. angew. Math.*, **188** (1950), pp. 205—227.
[28] L Rédei, Die Verallgemeinerung der Schreierschen Erweiterungstheorie, *Acta Sci. Math. Szeged*, **14** (1952), pp. 252—273.
[29] L. Rédei, *Algebra. I* (Leipzig, 1959).
[30] O. Schreier, Über die Erweiterung von Gruppen. I—II, *Monatshefte f. Math. u. Phys.*, **34** (1926), pp. 165—180; *Abh. Math. Sem. Univ. Hamburg*, **4** (1926), pp. 321—346.
[31] K. Shoda, Über die allgemeinen algebraischen Systeme. I—VIII, *Proc. Imp. Acad. Tokyo*, **17—20** (1941—44).
[32] G. Szász, On complemented lattices, *Acta Sci. Math. Szeged*, **19** (1958), pp. 77—81.
[33] G. Szász, Rédeische schiefe Produkte von Halbverbänden, *Acta Math. Acad. Sci. Hung.*, **7** (1956), pp. 441—461.
[34] Shih-Chiang Wang, Notes on the permutability of congruence relations, *Acta Math. Sinica*, **3** (1953), pp. 133—141.
[35] G. Zappa, Determinazione degli elementi neutri nel reticolo dei sottogruppi di un gruppo finito, *Rend. Accad. Sci. Fis. Mat. Napoli* (4), **18** (1951); **22—28** (1952).